Green@Hospital

web-based energy management system for the optimisation of the energy consumption in hospitals

Work Package 2

Pilot's solution set data analysis

Deliverable D2.1

Standard energy audit procedure

Document type	:	Deliverable
Document version	:	Final
Document Preparation Date	:	14/09/2012
Classification	:	Public
Author(s)	:	Schneider Electric SPA et al
File Name	:	D2.1.pdf

Project Ref. Number	:	CIP 297290
Project Start Date	:	01/03/2012
Project Duration	:	36 months
Website	:	www.greenhospital-project.eu

Project founded by the European Commission under the "Competitiveness and Innovation Framework Programme" (2007-2013)

Rev.	Content	Resp. Partner	Date
0.1	Template and index	Schneider	29/05/2012
0.2	First Draft	Schneider	27/07/2012
0.3	Document Comments	All	20/09/2012
0.4	Document Revision	Schneider - AEA	03/09/2012
0.5	Final Version	Schneider - AEA	12/09/2012

List of abbreviation

AHU: Air Handling Unit
BACS: Building Automation and Control System
BAS: Building Automation System
BMS: Building Management System
CMMS: Computerized Maintenance Management System
CRAC: Computer Room Air Conditioning
CRAH: Computer Room Air Handlers
D&T: Diagnostic and treatment
ECO: Energy Conservation Opportunities
EER: Experience Exchange Report
EIS: Energy Information System
EMCS: Energy Management and Control System
EUI: Energy Use Intensity
ICT: Information and Communication Technology
IEQ: Indoor Environmental Quality
I/O: Inputs/Outputs
IT: Information Technology
LPG: Liquefied Petroleum Gas
NBC: National Building Code
O&M: Operation and Maintenance
PDU: Power Distribution Unit
PSP: Policy Support Program
PUE: Power Usage Effectiveness
RE: Renewable Energy
RECS: Renewable Energy Certificate System
SCADA: Supervisory Control And Data Acquisition
T&C: Testing and Commissioning
WP: Work Package

Table of Contents

1. Introduction 7
   1.1. Project abstract 7
   1.2. Objectives of Work Package 2 7
   1.3. Purpose of the document 8
2. Audit procedures guidelines and partners skill assessment matrix 10
   2.1. Guidelines for audit procedures 10
      2.1.1. Conducting an audit program 10
      2.1.2. Energy audit process 12
      2.1.3. Resources and references 16
   2.2. Partner skills assessment matrix 18
      2.2.1. Tasks 18
      2.2.2. Skills 19
   2.3. Energy audit report format 22
3. Needs and preferences for comfort questionnaire 23
   3.1. Introduction 23
   3.2. Procedure for setting the questionnaire 23
   3.3. Final questionnaire 25
      3.3.1. Questionnaires – HVAC solutions for rooms 25
      3.3.2. Questionnaires – Lighting solutions in rooms 32
      3.3.3. Questionnaires – HVAC solutions for surgery theatres 36
      3.3.4. Questionnaires – Solutions for Data Centres 40
      3.3.5. Questionnaires – Solutions for a geothermal system 43
4. Metrics and normalization factors 45
   4.1. Energy Usage in Hospitals 45
      4.1.1. Major Electricity End-Users in Hospitals 46
   4.2. Performance metrics 48

4.2.1. Performance Metrics - Definition 48

4.2.2. Performance Metrics Set 49

4.2.3. Recommended Building Performance Metrics 76

(1) Basic Energy Metrics 78

(2) Advanced Energy Metrics 78

(3) Basic System Metrics 80

(4) Advanced System Metrics 82

4.3. Recommendations for Measuring and Reporting Overall Data Center Efficiency 87

4.3.1. Definitions 88

4.3.2. PUE Metric Calculation 90

(1) Data Center Boundaries 90

(2) PUE Categories 91

(3) Weighing of Energy Types Based on Source Energy 92

(4) Renewable Energy Sources 93

(5) Combined Heat and Power Plants 94

(6) Reused Data Center Energy 95

5. ICT PSP Methodology and benchmarking approach 97

5.1. Methodology for energy efficiency measurements applicable to ICT in building97

5.2. Benchmarking: Healthcare Facilities 99

5.2.1. Benchmarking Indicators 99

5.2.2. Benchmarking Approaches 100

5.2.3. Energy performance benchmarking tools for healthcare facilities 101

(1) Energy benchmarking system for hospitals by ENERGY STAR 101

(2) Energy benchmarking system for hospitals by LBNL 102

(3) Normalizing Factors 104

(4) Metric Categories & Rationale 105

(5) Implementation Protocol 110

(6) Types and Locations of Measurements 111

6. BMS/SCADA and ICT infrastructure analysis 116

6.1. CEN UNI EN 15232 analysis 116

6.2. BMS/SCADA and ICT infrastructure check-list 116

7. Pilot cases 119

7.1. Actual energy performance evaluation 119

7.2. First analysis of solution sets 121

7.2.1. Hospital Virgen de las Nieves (HVN) 121

7.2.2. Hospital de Mollet (HML) 123

7.2.3. Ospedali Riuniti di Ancona (AOR) 124

7.2.4. Saint George Hospital (SGH) 124

8. Conclusions 126

References 127

Annexes 129

1. Introduction

1.1. Project abstract

Hospitals are known to be large energy consumers and in most European countries the high proportion of ageing building stocks makes hospitals amongst the least energy efficient public buildings. Nowadays there is a growing urgency to achieve real energy savings from existing building stocks and to build more sustainable new hospitals.

The GREEN@Hospital project aims at integrating the latest ICT solutions in order to obtain a significant energy saving in existing hospital buildings, through a better management of energy resources and losses reduction.

This will be carried out by the realization of Web-based Energy Management and Control Systems – Web-EMCS – which integrates monitors and controls multiple buildings systems at the component level. Moreover models to assess the energy savings will be developed and algorithms for consumption optimization implemented. The proposed solution will be also supported by a Maintenance Energy Service, specifically developed and integrated in the Web-EMCS to maintain optimal energy efficiency after initial efforts.

Four different hospitals have been selected across Europe to take part in the pilot in order to demonstrate the validity of the proposed solution under real operating conditions. Each hospital will make available specific areas selected upon the presence of: 1) renewable energy sources, 2) already available building management systems that can be easily integrated in the Web-EMCS, 3) refurbishing plans aiming at energy efficiency improvement. Moreover, they will contribute by providing different functional areas so that the consumption needs of a typical hospital structure will be globally included in the technical solution.

An intense dissemination activity will be planned to spread the project outcomes across Europe. The study will be the basis for possible replications of the solutions taking into account savings and return of investments.

1.2. Objectives of Work Package 2

The main objectives of the WP2 are:

- to perform an energy audit of the 4 pilot hospitals;

- to collect information about the ICT infrastructure of each Pilot;

- to develop a standard benchmarking model for hospitals.

As in the other building types, energy use of hospitals varies with climate conditions and occupancy schedules. According to ICT PSP common terminology (for more details see chapter 5) these variables are called “Predictor Variables”.

However, hospital energy use also varies according to specific factors such as type of patient, type and length of treatment, use of specific medical equipment, availability (or not)

of energy intense services such as laundry or kitchen, etc. All these factors make comparison among energy uses of hospitals very difficult, precluding a sound evaluation of energy performance.

A strong co-operation between technological partners and Pilots is required to achieve the objectives of this WP.

The information collected in this phase will be the base for the activities of all the following WPs. The output of this WP will be not only a list of energy solution sets but also a list of conceptual control strategies to be evaluated in WP4.

In this WP the ICT PSP methodology for energy saving measurement will be adopted and data from the pilots will be prepared in order to be used by the software tool developed.

1.3. Purpose of the document

This document shows the results of the setting of the energy audit procedure. The work has been carried out integrating the partners' expertise.

The set procedure aims at collecting information on energy consumption, energy consuming systems and comfort conditions in the hospitals.

Compared to the typical energy audit procedures, in this project the attention will be mainly focused on Building Management Systems and Automation. The main tool used for collecting information about building automation is the standard CEN UNI EN 15232:2012, "Energy performance of buildings – Impact of Building Automation, Controls and Building Management".

Chapter number 2 gives all the basic information about how to carry on an audit program. Building stakeholders and Audit team roles are explained in detail. The energy audit phases are listed and a detailed list of the systems that should be audited is presented. The second section of the chapter focuses on the specific tasks that need to be completed during the audit phase and describes the skills of the experts who should perform them. Finally the energy audit report format is suggested.

This presentation aims at giving a clearer idea about what an energy audit is and how to perform it.

Chapter 3 describes how to prepare a good questionnaire to involve users in a hospital auditing phase identifying the key stakeholders for each area. The result of this analysis is a final questionnaire which is ready to be submitted to hospital end users.

Chapter 4 presents a key tool to choose the key variables to be measured and stored during the audit phase. For that reason the main areas of consumption in the hospital environment are listed and a standard set of performance metrics is presented to help the auditor to collect data in a systematic way and to evaluate the performance of their buildings. Then a reduced amount of key performance metrics is presented together with the normalization factors needed to make comparable data collected from different

buildings. A paragraph is dedicated to Data Centers efficiency measurement because of their particular normalization factor based on the Power Usage Effectiveness definition.

Chapter 5 introduces the ICT PSP projects common methodology to calculate energy saving. It is a key paragraph in this document and it escribes how to treat data of all ICT PSP projects in order to make data comparable. The second part of the chapter is particularly dedicated to healthcare facilities and describes how to create a benchmarking model for hospitals.

Chapter 6 presents another powerful tool in the performance of an energy audit focused on the ICT aspect. It describes what information about BMSs and SCADAs should be collected to easily understand and how to integrate them in a more complex Energy Management and Control System which is the final aim of the project.

The last chapter describes the main areas which are involved in the project for each Pilot hospital: all the lessons learnt in the previous chapters will be specifically applied to these areas within WP2.

2. Audit procedures guidelines and partners skill assessment matrix

2.1. Guidelines for audit procedures

2.1.1. Conducting an audit program

Conducting energy audits of healthcare facilities raises many logistical and budgetary issues that do not typically pertain to other buildings energy audit programs. Early resolution of these issues will help to prevent problems and delays occurrence before and during the audit process. Some of the issues that should be addressed before the audit process are:

- the Audit Stakeholders involvement;
- the Auditor and the Audit Team appointment;
- the setting of protocols and data format for the information collection.

The Audit Stakeholders involvement

The involvement of the Stakeholders is a key issue and the Work Package 6 of the Green@Hospital project – Dissemination and communication, directly addresses this point. In fact, the Audit Stakeholders deserve in the case of healthcare services particular attention, even before describing the actors who really perform it. Hospitals are responsible and accountable to a broad network of interested parties or stakeholders who use, render, regulate and benefit from hospital services.

To promote themselves, hospitals pursuing an ambitious energy management strategy should put a great effort in involving their stakeholders and in communicating them the main results and successes.

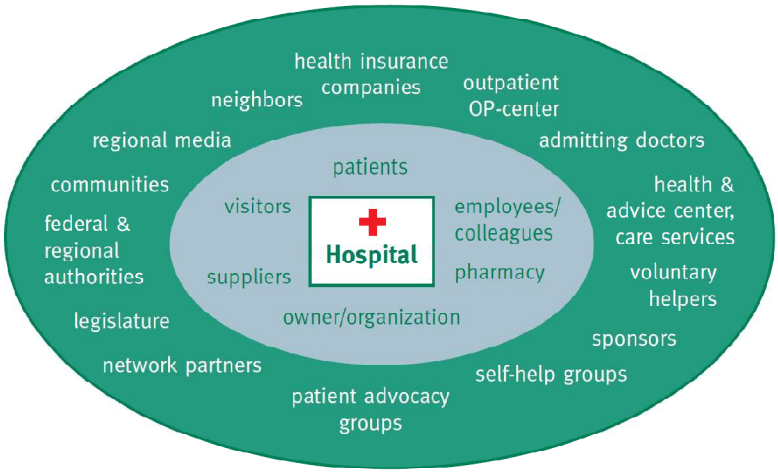

Figure 1 Hospital Stakeholders (source: Greener Hospitals - Improving Environmental Performance)

As the healthcare sector gets more competitive, regulated, and litigious, it should vigorously work to let the world know that it is committed to protect the environment and to increase energy efficiency in its processes.

Communication campaigns should emphasize good examples of energy management that usually include — but are not limited to — advertising, public relations and community relations. The most effective ones channel their messages to all stakeholders.

The Auditor and the Audit Team appointment

The Energy Audit should be carried out by a competent person having adequate technical knowledge on building services installations, particularly Heating, Ventilation and Air-Conditioning (HVAC) Installation, Lighting Installation and any other installations. This competent person is referred to as the "auditor" and a team of auditors forms the "audit team". The number of auditors and time required for an audit depend on the audit scope and objectives. During the audit process, the auditor needs assistance and cooperation from the audited, such as end-users, operation and maintenance (O&M) personnel, etc.

The setting of protocols and the data format for the information collection

The information collected by the audit team will include:

a) General building characteristics such as floor areas, numbers of end-users, construction details, building orientation, building facade, etc.; the information will be more detailed in the areas where the solution sets will be tested;

b) Technical characteristics of energy consuming equipment/systems, design conditions and parameters;

c) Building services design report with system schematic diagrams and layout drawings showing system characteristics, information on system control and main observations;

d) Characteristics of BMS/SCADA/building automation/ICT/Web-EMCS interface;

e) Equipment/system operation records, including data logs of metered parameters on temperature, pressure, current, operational hours, etc. ;

f) Record of the energy conservation opportunities, with reference both to the ones already identified and to the new outcome of the audit;

g) Record of maximum demand readings;

h) O&M manuals and testing and commissioning (T&C) reports;

i) Energy consumption bills in the previous three years;

j) Daily climatic data (temperature, relative humidity, irradiation, wind speed) of the previous three years;

k) Data concerning hospitals enlargements (they influence consumptions).

Many efforts should be put on collecting and analyzing the information in a standard way in order to make them as much clearly as possible and useful for further improvements.

It is also important to collect the information in a structured database and to follow a dedicated protocol in order to have coherent data types both for the four pilot hospitals and for a wider application of the energy audit procedure.

Also in the context of the GREEN@Hospital project and taking into account the results available from the previous HosPilot project, it is considered to be very useful to propose a protocol for the energy audit conduction in order to apply it to the different pilot cases and customize it on the basis of the feedbacks of the filing.

A set of forms will be followed and it will be asked to the auditors to collect the information of the hospitals using these forms and reporting feedbacks on the filing and any proposal for improving them, both in their general use and in hospital application. The forms will be updated also by the feedback and information of the "Metrics & Normalization factors" document in order to be congruent with its outcomes.

Special attention will be paid to the analysis of the energy conservation opportunities already identified; during the audit details on the systems operation can be noticed and recorded in order to deepen and improve the technical and economic analysis of the opportunity.

2.1.2. Energy audit process

Objectives

The objectives of an energy analysis or audit are to identify and develop modifications that will reduce the energy use and/or cost of operating a building. The results should be presented in a format that will provide the information needed by an owner/operator to decide if any, some, or all of the recommended modifications should be implemented. An energy analysis includes the following steps:

1. Collect and analyze historical energy use.
2. Study the building and its operational characteristics.
3. Identify potential solutions that will reduce the energy use and/or cost.
4. Perform an engineering and economic analysis of potential modifications.
5. Prepare a rank-ordered list of appropriate modifications.
6. Prepare a report to document the analysis process and results.

Key Elements

In order to have a general overview of the main outcomes expected from the energy audit process, here the key elements of a building energy audit/analysis are shown. As

mentioned before, a detailed form to help the energy audit conduction will be provided hereinafter.

After the documental analysis, it may be possible to conduct the audit focusing on specific areas, keeping a general walk-through in the whole building. The specific area may be chosen on the basis of the preliminary analysis; in this case the areas can be those subjected to the implementation of the solution sets already identified.

1. Analysis of two or more years of utility consumption and cost, review of building plans, and a walk-through of the building itself (or of the most significant parts of it) to establish:

- Type of building, principal use, and area.
- Energy Utilization Index (EUI): (annual energy use) kWh/m2 per year.
- Cost index: €/m2 per year.
- Breakdown of various spaces within the building by function, hours of use, and area.
- Determine if efficiency may be affected by building functions that differ from the original functional intent of the building.
- Determine if any maintenance problems or practices may affect efficiency.
- Comparison of energy and cost indices of the building with one or more databases.

2. Description and analysis of the energy-using systems of the building, resulting from on-site observation, measurement, and engineering calculations, including:

- Envelope
- Lighting
- HVAC
- Domestic hot water
- BMS
- SCADA
- ICT
- Laundry
- Food preparation
- Conveying systems
- Other systems

3. Description and analysis of the energy-producing systems of the building, resulting from on-site observation, measurement, and engineering calculations, including:

- Thermal solar system
- Photovoltaic solar system
- Geothermal energy system
- District energy supply
- Hydroelectric power
- Purchasing of RECS energy (from Renewable Energy Certificate System)

4. As a result of engineering analysis and economic calculations, developing of:

- Breakdown of the components of annual energy use and cost.
- Recommended energy conservation measures, including predicted savings and cost to implement.
- A description and cost estimate of repairs that are needed in order for energy conservation measures to be effective.
- A description and cost estimate of measurement and verification methods needed to determine the actual effectiveness of measures.
- Energy analysis summary that includes:

i. Energy use and cost

ii. Ultimate target for energy use and cost

iii. Savings from recommended measures

iv. Comparison of current recommendations to ultimate target

Levels of Efforts

Different levels of energy analysis can be performed on any given building, or group of buildings, providing information that may be used for widely varying purposes. A building owner contemplating major energy-saving capital improvements will need a significantly higher level of confidence in the analysis than an owner who simply wishes to compare the level of efficiency of the building relative to other similar buildings.

As a result, the levels of analysis are usually organized into the following categories:

- Preliminary Energy Use Analysis
- Level I Analysis—Walk-Through Analysis
- Level II Analysis—Energy Survey and Analysis
- Level III Analysis—Detailed Analysis of Capital Intensive Modifications

Preliminary analysis is a critical first step in the auditing process and involves analyzing the facility's historical energy use, benchmarking the building, and performing a utility rate analysis to point out any cost saving opportunities.

A Level I audit includes the preliminary energy use analysis described above but also includes a site visit by an engineer and a report detailing low-cost/no-cost measures and potential capital improvements for further study. It is the simplest type of energy audit and is the most basic requirement of the energy audit. The audit should be conducted by walking through the building and concentrating on the major energy consuming equipment/systems such as chillers, large air handling units (AHUs), or common items usually with Energy Conservation Options easily identifiable such as over-cooled spaces and T8 fluorescent tubes being used. Reference to record of equipment ratings, technical catalogue, O&M manuals that are readily available will be very helpful to quickly determine where equipment/systems are operating efficiently. Calculations, usually simple in nature, should be done to quantify the saving achievable from implementation of the identified ECOs (Energy Conservation Opportunities). The audit should be carried out in one day by either one auditor or one audit team, depending on the size and the complexity of the building and the scope of the audit. If the audit team wants to check more areas, more auditor-hours are required. Usually, simple instruments such as thermometer tube, multi-meters and lux meter will serve the purpose. A Walk-through Audit should, other than fulfilling the original objectives, give an overview of other areas with potential ECOs.

A Level II audit includes the preliminary energy use analysis and Level I analysis but also includes more detailed energy calculations and financial analysis of proposed energy efficiency measures. The financial analysis or Life Cycle Analysis allows the facility owner to truly understand the financial benefits of installing energy efficient measures. The audit team should practically check the majority or all equipment/systems, identify as many ECOs as possible, classify them into different ECO categories, further study if more complex items are involved, formulate a plan for implementation and finally present it to the building management. This audit goes much beyond the Walk-through Audit. The auditor has to exercise more detailed planning. The auditor-hours could be about 5 to 10 times more, depending on the complexity of the equipment/systems involved and size of the building. The report should outline the objectives and scope of audit, description of characteristics and operational conditions of equipment/systems audited, findings in the audit, ECOs identified, corresponding savings and implementing costs, recommendations on ECO implementation and program and any other follow-up actions.

A Level III analysis is a further expansion from the previous levels of effort and is based on the deeper analysis of the Selected Solution. This may include further refinement of an energy model or more extensive data collection. For the aim of the Work Package 2, and of the whole project in a more general view, it is considered to be enough to perform an energy audit of Level I and to deepen the analysis to Level III for the Selected Solutions.

2.1.3. Resources and references

The intent of this chapter is not to set the complete list of the references that will be considered in the development of the project but to highlight and briefly introduce the most relevant ones.

HosPilot

The HosPilot project aims at supporting the decision makers with an integrated approach which drastically helps reducing the energy consumption of newly built hospitals and existing hospitals being refurbished, increasing well-being and comfort. The main objective of the project is to develop a methodology that will be able to provide a hardware description for an energy efficient system for any hospital, based on specific requirements of that hospital.

Procedures for Commercial Building Energy Audits – ASHRAE

This reference defines best practices for energy survey and analysis for purchasers and providers of energy audit services.

Advanced Energy design Guide for Large Hospitals – ASHRAE

This reference is used for "standard" mid- to large-size hospital, typically at least 9300 m2 (100000 ft2) in size, but the strategies apply to all sizes and classifications of large hospitals. Space types covered include cafeterias and kitchens; conference and office areas; reception and waiting areas; examination and treatment rooms; clean and soiled workrooms; nurse stations; nurseries and patient rooms; operating, procedure and recovery rooms; sterilizer equipment areas; pharmacies and laboratories; triage, trauma, and emergency rooms; physical therapy and radiology/imaging rooms; storage, receiving, and mechanical/electrical/telecom rooms. This Guide does not directly address other, atypical or special-use spaces.

Energy Star

ENERGY STAR is a government-industry partnership managed by the U.S. Environmental Protection Agency and the U.S. Department of Energy. The program's website offers energy management strategies, benchmarking software tools for buildings, product procurement guidelines, and lists of ENERGY STAR–qualified products and buildings.

For more information on Energy Star: www.energystar.gov/benchmark

For more information on Energy Star's focus on Hospital Energy Efficiency:

http://www.energystar.gov/ia/business/healthcare/IncreasingHospitalEnergyPerformance0105.pdf

EU standard CEN UNI EN 15232

This standard is used to estimate the impact of building automation systems on active energy efficiency, stating potential savings on heating and electricity according to the type of building. More details and the application on pilot cases can be found in chapter 6.

LEED for Healthcare

The Leadership in Energy and Environmental Design (LEED) Green Building Rating System® encourages and accelerates global adoption of sustainable green building and development practices through the creation and implementation of universally understood and accepted tools and performance criteria.

LEED for Healthcare, one of the protocols proposed for building construction, guides the design and construction of both new buildings and major renovations of existing buildings, and can be applied to inpatient, outpatient and licensed long-term care facilities, medical offices, assisted living facilities and medical education and research centers.

The LEED for Healthcare Rating System recognizes the unique nature of healthcare facilities while maintaining close alignment to LEED for New Construction. Healthcare buildings often have strict regulatory requirements, 24/7 operations, and specific programmatic demands that make pursuing LEEDNC difficult. The LEED for Healthcare Rating System acknowledges these differences by both modifying existing credits and creating new, Healthcare-specific credits. For example, most of the Indoor Environmental Quality credits have been modified to align the need for infection control, to protect patients from contaminants, and the strict code regulations on ventilation with Green building strategies.

2.2. Partner skills assessment matrix

In order to review the initial audit, to extract the most crucial concepts and those necessary for proper development, it is mandatory to assess the skills of the experts who will perform the audit and the tasks that have to be performed.

2.2.1. Tasks

The tasks selected can be divided in three different groups:

- Data collection. This first group of tasks is related to the collection of data and technical information of the building and its energy costs.
- Calculation. All the information must be classified and organized to assure that the different subsystems selected are provided with reliable data.
- Energy Conservation Measures. From a general point of view, the different measures could be implemented for the optimization and the improvement of operation, maintenance, energy use and efficiency.

More in specific, each task can be divided in different sub-tasks, as described below.

Data Collection

- General description of the building (m2, beds,..): Physical characteristics of the building case study.
- Annual Energy Use (type of energy, units): Quantification of energy consumed and discrimination of their nature.
- Cost of Annual Energy Use (Euros per type): Total cost of the energy associated.
- Breakdown of spaces by function, hours of use, plant distribution: Characterization of the major cost centers of the hospital and the main operating parameters of each that may be important when assessing future actions.
- Operation parameters (temperature, artificial light-hours, use hours): Slogans work of the different subsystems of each zone.
- Maintenance practices concerning efficiency: standard parameter set to meet the user needs to install the most efficient way possible
- Description of energy-using systems and components (Lighting, HVAC, water), technical characterization, input and output measurement: Description and characterization of the type of energy consumed by each of the teams in the installation.
- Description of energy-producing systems and components (Lighting, HVAC, water,..), technical characterization, input and output measurement: Analysis and technical description of the equipment at the facility to obtain a more complete entire system.

- Description of BMS/SCADA (systems, components and functions).
- Description of ICT (systems, components and functions).

Calculations

- Breakdown of energy use and costs of systems and components: Discrimination theoretical amount of energy consumed by each of the facilities in the Hospital.

Energy Conservation Measures

- Without cost: Explanation of possible measures to implement efficient techniques in the facilities that do not involve a cost.
- With cost (cost estimate of implementation, estimation of annual savings, rate of amortization): Presentation and evaluation of technical measures involving a cost efficient partner and that therefore must attach a depreciation study of the same.
- Measurements of savings: Actual measurement of the potential savings associated with the various measures implemented.
- Verification of saving: Verification and quantification of the savings.

2.2.2. Skills

The completion of the tasks previously described should be performed by experts in the fields listed below. To assure the reliability and quality of the data, it would be advisable that some of these experts are staff of the hospital.

Administration

- Finance / Management:
  - General Manager of the hospital or Chief Financial Officer.

    He/She should give access to information of the activity of the hospital, that is, number of rooms, beds, operation rooms, and to information related to global energy costs.

    Participation in the project should be limited to one or two meetings during this phase.
- Administration:
  - Professionals from the administration department of the hospital.

    They should provide of all information authorised by the General Manager, eventually from different sources or department of the hospital.

    They should give general information of the building and main indicators of the health services provided by the hospital.

Participation in the project should be permanent throughout the data collection phase.

Engineering

- Technical Manager
  - Manager with general expertise in hospital engineering, and general knowledge of HVAC, BACS and ICT technologies.

    He/She would be the person in charge of the engineering department of the hospital or provide this service to the hospital as an engineering assessment service company.

    He/She should have good knowledge of all Technical Systems of the Hospital, especially from a calculation and sizing point of view.

    He/She will provide technical data of the HVAC, Lighting, BACS and ICT facilities of the hospital, supervise all technical data, take part in the measurement and monitoring phase and propose improvement solutions.

    Participation in the project should be permanent throughout the data collection phase.
- HVAC/Lighting Expertise
  - Engineer with expertise in HVAC/Lighting systems, especially related to hospital facilities. He/she should also have knowledge of BACS and ICT technologies.

    He/She would be the person in charge of the HVAC / Lighting projecting, sizing and operation of a hospital or provide this service to the hospital as an engineering assessment service company or supplier of HVAC/lighting products & solutions.

    He/She will help to describe the HVAC systems of the hospital, record operational data, assess the measurement and monitoring phase, help in the trending analysis and propose solutions and improvement measures.

    Participation in the project should be permanent throughout the data collection phase.
- BMS / ICT Manager
  - Engineer with expertise in BMS/ICT systems, especially related to hospital facilities.

    He/She would be skilled in projecting, implementing and programming of BMS and ICT solutions in hospital or in providing this service as an engineering assessment service company or supplier of BMS & ICT products & solutions.

He/She will help to describe the BMS/ ICT systems of the hospital, record operational data, assess the measurement and monitoring phase, help in the trending analysis and propose solutions and improvement measures.

Participation in the project should be permanent throughout the data collection phase.

Operation & Maintenance

- Maintenance Manager
  - Engineer or professional in charge of the management of the maintenance department of a hospital. Preferably should be in this position at the moment in each of the hospitals of the G@H Project.

    He/She should have broad experience in the operation and maintenance of the hospital, with both technical and management skills and responsibility and access to the human and technical means and resources of the department.

    He will validate and certify the information of maintenance an operation practices and of operation parameters (temperature, use hours,) and help in the identification of improvement solutions.

    Participation in the project should be permanent throughout the G@H project.
- Maintenance Operator
  - Engineer or professional in charge of the maintenance operation of the hospital. In direct dependence of the Maintenance Manager, should hold the position of the team leader (or equivalent) in charge of the human force of the department.

    He/She should experience ranging from 6 to 10 year in the operation department of the hospital, good operational skills, ability to repair and implement and knowledge in preventive and predictive maintenance.

    He will implement measure equipment in the System Rooms, provide the operation parameters and provide information of maintenance an operation practices.

    Participation in the project should be permanent throughout the G@H project.
- Energy Manager
  - Engineer with expertise in Energy Management, Technical Building Management and Building Control Systems, especially related to hospital facilities.

He/She would be the person in charge of the Energy Management of the hospital or provide this service to the hospital as an engineering assessment service company.

He will take part in the recollection of information related to the energy use and consumption and to describe the actual maintenance practices concerning efficiency. He will play a leading role in the calculation and improvement of the Subsystem energy costs and in its measurement, verification and validation

Participation in the project should be permanent throughout the G@H project.

The skill assessment matrix can be found attached to the document (D2.1_Annex_Skill Assessment Matrix).

2.3. Energy audit report format

In the Energy Audit Report the main characteristics of the hospital energy consumption are summarized. In particular, the form reports the following characteristics:

- Building location
- Heating and Cooling Degree Days
- Area of the building (gross, net, heated, cooled)
- Preliminary building use
- Energy use and comparison among the hospitals
- Energy use breakdown
- Special loads (medical equipment, server room, lifts,)
- Energy bills report
- Building shell characteristics
- Lighting systems
- HVAC systems
- Domestic Hot Water system

The information of the hospitals will be collected during the audit and the report will be revised with the contribution of the partners that will conduct the energy audit.

In Annex 2 (D2.1_Annex_Energy Audit Level I) an energy audit report format is proposed.

3. Needs and preferences for comfort questionnaire

3.1. Introduction

A preliminary list of solution sets has been already identified in the pilots and some of these will finally be applied to the hospitals. These control measures aim at reducing energy use in hospitals, however, energy savings should not come in lieu of user (stakeholder) satisfaction.

The stakeholders of each solution set in the preliminary list were identified by the respective hospitals in:

- Patients and families
- Doctors and nurses (Pharmacists and nurses)
- System operator
- IT staff.

3.2. Procedure for setting the questionnaire

The objective of this section is to propose a series of questionnaires to systematically collect the opinion of the stakeholders on:

- the current performance of the system (i.e., before the solutions are applied);
- the desired performance of the system (i.e., requirements of the solutions to be applied).

As for the target groups, the Table 1 summarizes the relevant "stakeholders" for each type of system. Note that the table does not specifically mention the control solutions, but rather the systems that will be controlled.

Table 1 Stakeholders for each selected area

	Patients and families	**Doctors and Nurses (Pharmacists and nurses)**	**System Operator**	**IT staff**
HVAC rooms	YES	YES	YES	
Lighting rooms	YES	YES	YES	
HVAC surgery		YES	YES	
Data Centers			YES	YES
Geothermal syst			YES	
HVAC oncology pharmacy		YES	YES	
Lighting Oncology Pharmacy		YES	YES	

The types of questions chosen for the questionnaire are presented below on the basis of the target group addressed.

Patients and families

Closed questions on:

- Comfort (current situation and preferences)
- Satisfaction with the current access to control and preferences

Doctors and Nurses

Mix of open and closed questions on:

- Current conditions vs. medical requirements/judgment (i.e., how well does the system provide the conditions that the patients need?)
- Access to control (current situation, preferences)
- Awareness on the system control capabilities (i.e., do they know to what extent they can control the system? Do they know how to tune the system?)

System operator

Mix of open and closed questions on:

- Occupant's access to control
- Control capability – parameters that can be tuned (current situation and preferences)
- Control easiness (current situation and preferences)
- Awareness on the system control capabilities (i.e., do they know to what extent they can control the system? Do they know how to tune the system?)
- Attention required / automatic control.

IT staff

Mix of open and closed questions on the technical requirements of the IT equipment

3.3. Final questionnaire

In this paragraph the final questionnaire is presented. It will be filled by the hospital inhabitant and the results will help in the analysis of the possible solutions.

3.3.1. Questionnaires – HVAC solutions for rooms

Patients and families (room occupants)

Gender	Woman Man
Age	<= 30 31-40 41-50 51-60 >= 60
Length of hospital stay	<= 1 week 1-2 weeks >2 weeks
Season	Winter Spring Summer Fall

General thermal comfort in my room	7 – Cold 6 - Cool 5 – Slightly Cool 4 - Neutral 3 – Slightly Warm 2 - Warm 1 – Hot
Overall, how satisfied are you with the temperature in your room?	7 – Very satisfied 6 5 4 3 2 1 – Very dissatisfied
How stable is the room temperature during the day?	7 - Stable 6 5 4 3 2 1 - Changes during the day

The following characteristics of my room generate discomfort (Please, check all that apply)	Hot/cold floor surfaces Hot/cold ceiling surfaces Hot/cold wall surfaces Hot/cold window surfaces Drafts from windows Drafts from vents Drafts falling from the ceiling My area is hotter than other areas My area is colder than other areas Heating/cooling system does not respond quickly enough to the thermostat The ventilation system is too noisy Other, specify ….
Air humidity in my room	7 – Too humid 6 5 4 3 2 1 – Too dry
Air odours in my room	7 - Odourless 6 5 4 3 2 1 – Smelly
Overall perception of air quality in my room	7 – Fresh 6 5 4 3 2 1 – Stuffy

Overall, I can sufficiently control the environmental conditions in my room	7 - Completely agree 6 5 4 3

	2 1 - Completely disagree
Please, tick if it is important for you to control the following environment parameters	Heating Cooling Ventilation
Please, tick if you would like to have more control over the following parameters (i.e., if your current access to control is not enough)	Heating Cooling Ventilation

Doctors and nurses

Please, respond the following questions according to your medical judgment (i.e., how well does the system provide the conditions that the patients need?)

Gender	Woman Man
Age	<= 30 31-40 41-50 51-60 >= 60

General thermal comfort in the rooms	7 – Cold 6 - Cool 5 – Slightly Cool 4 - Neutral 3 – Slightly Warm 2 - Warm 1 – Hot
Overall, how satisfied are you with the temperature in the rooms?	7 – Very satisfied 6 5 4 3 2 1 – Very dissatisfied
How stable is the room's temperature during the day?	7 - Stable 6 5 4 3 2 1 - Changes during the day

The following characteristics of the rooms generate discomfort (Please, check all that apply)	Hot/cold floor surfaces Hot/cold ceiling surfaces Hot/cold wall surfaces Hot/cold window surfaces Drafts from windows Drafts from vents Drafts falling from the ceiling My area is hotter than other areas My area is colder than other areas Heating/cooling system does not respond quickly enough to the thermostat The ventilation system is too noisy Other, specify ….
Air humidity in the rooms	7 – Too humid 6 5 4 3 2 1 – Too dry
Air odours in the rooms	7 - Odourless 6 5 4 3 2 1 – Smelly
Overall perception of air quality in the rooms	7 – Fresh 6 5 4 3 2 1 – Stuffy

I am aware of the control capabilities of the system	7 - Completely agree 6 5 4 3

	2 1 - Completely disagree
I know how to adjust the system	7 - Completely agree 6 5 4 3 2 1 - Completely disagree
Overall, I can sufficiently control the environmental conditions in the rooms (i.e., the control capabilities of the system are enough)	7 - Completely agree 6 5 4 3 2 1 - Completely disagree
Please, tick if it is important for you to control the following environment parameters	Heating Cooling Ventilation
Please, tick if you would like to have more control over the following parameters (i.e., if your current access to control is not enough)	Heating Cooling Ventilation

What are strengths of the system? And the weaknesses?
What changes would you make to improve the system?

System operator

Occupants can operate windows	7 - Completely agree 6 5 4 3

	2 1 - Completely disagree
Occupants can adjust the heating system in rooms	7 - Completely agree 6 5 4 3 2 1 - Completely disagree
Occupants can adjust the cooling system in rooms	n/a (no cooling) 7 - Completely agree 6 5 4 3 2 1 - Completely disagree

I am aware of the control capabilities of the system	7 - Completely agree 6 5 4 3 2 1 - Completely disagree
I know how to adjust the system	7 - Completely agree 6 5 4 3 2 1 - Completely disagree
The system allows me to control all the parameters I would like to control	7 - Completely agree 6 5 4 3 2 1 - Completely disagree

Check all the parameters that you can accurately control	Heating coil water temperature Cooling coil water temperature Heating and cooling coils flow rate Room air temperature set points (thermostat) AHU total supply air flow rate AHU outdoor air flow rate Room total supply air flow rate Room outdoor air flow rate
The control system is user friendly	7 - Completely agree 6 5 4 3 2 1 - Completely disagree
Operating the control system takes too much of my time	7 - Completely agree 6 5 4 3 2 1 - Completely disagree

What are the key features a control system should include? (i.e., what makes a control system "good"?)
What are strengths of the system? And the weaknesses?
What changes would you make to improve the system?

3.3.2. Questionnaires – Lighting solutions in rooms

Patients and families (room occupants)

Gender	Woman Man
Age	<= 30 31-40 41-50 51-60 >= 60
Length of hospital stay	<= 1 week 1-2 weeks >2 weeks
Season	Winter Spring Summer Fall
There is enough artificial light in my room	7 - Completely agree 6 5 4 3 2 1 - Completely disagree
There is enough daylight in your room	7 - Completely agree 6 5 4 3 2 1 - Completely disagree
Overall, how satisfied are you with the visual comfort of the lighting (e.g., glare, reflections, contrast)?	7 – Very satisfied 6 5 4 3 2 1 – Very dissatisfied
Please, tick if it is important for you to control the following environment parameters	Artificial Lighting Daylight
Please, tick if you would like to have more control over the following parameters (i.e., if your current access to control is not enough)	Artificial Lighting Daylight

Doctors and nurses

Gender	Woman Man
Age	<= 30 31-40 41-50 51-60 >= 60
There is enough artificial light in my room	7 - Completely agree 6 5 4 3 2 1 - Completely disagree
There is enough daylight in your room	7 - Completely agree 6 5 4 3 2 1 - Completely disagree
Overall, how satisfied are you with the visual comfort of the lighting (e.g., glare, reflections, contrast)?	7 – Very satisfied 6 5 4 3 2 1 – Very dissatisfied
Please describe any other issues related to light that are important to you:	
I am aware of the control capabilities of the system	7 - Completely agree 6 5 4 3 2 1 - Completely disagree
I know how to adjust the system	7 - Completely agree 6 5 4 3 2

	1 - Completely disagree
Please, tick if you would like to have more control over the following parameters (i.e., if your current access to control is not enough)	Artificial Lighting Daylight

System operator

Occupants can adjust the artificial light	7 - Completely agree 6 5 4 3 2 1 - Completely disagree
Occupants can adjust the shading from the sun (i.e., can control daylight)	7 - Completely agree 6 5 4 3 2 1 - Completely disagree

I am aware of the control capabilities of the system	7 - Completely agree 6 5 4 3 2 1 - Completely disagree
I know how to adjust the system	7 - Completely agree 6 5 4 3 2 1 - Completely disagree
The control system is user friendly	7 - Completely agree 6 5 4 3 2 1 - Completely disagree
Operating the control system takes too much of my time	7 - Completely agree 6

	5 4 3 2 1 - Completely disagree

What are the key features a control system should include? (i.e., what makes a control system "good"?)
What are strengths of the system? And the weaknesses?
What changes would you make to improve the system?

3.3.3. Questionnaires – HVAC solutions for surgery theatres

Doctors and nurses

Please, respond the following questions according to your medical judgment (i.e., how well does the system provide the conditions required in a surgery theatre?)

What are the most important environmental conditions the HVAC system in a surgery theatre must provide? Temperature and humidity requirements: Air quality requirements:

How well does the system meet the temperature and humidity requirements (the ones you wrote above)?	7 – Very satisfied 6 5 4 3 2 1 – Very dissatisfied
How well does the system meet the air quality requirements (the ones you wrote above)?	7 – Very satisfied 6 5 4 3 2 1 – Very dissatisfied

I am aware of the control capabilities of the system	7 - Completely agree 6 5 4 3 2 1 - Completely disagree

I know how to adjust the system	7 - Completely agree 6 5 4 3 2 1 - Completely disagree
Overall, I can sufficiently control the environmental conditions in the surgery theatre (i.e., the control capabilities of the system are enough)	7 - Completely agree 6 5 4 3 2 1 - Completely disagree
Please, tick if it is important for you to control the following environment parameters	Heating Cooling Ventilation
Please, tick if you would like to have more control over the following parameters (i.e., if your current access to control is not enough)	Heating Cooling Ventilation

What are strengths of the system? And the weaknesses?
What changes would you make to improve the system?

System operator

I am aware of the control capabilities of the system	7 - Completely agree 6 5 4 3 2 1 - Completely disagree

I know how to adjust the system	7 - Completely agree 6 5 4 3 2 1 - Completely disagree
The system allows me to control all the parameters I would like to control	7 - Completely agree 6 5 4 3 2 1 - Completely disagree
Check all the parameters that you can accurately control	Heating coil water temperature Cooling coil water temperature Heating and cooling coils flow rate Room air temperature set points (thermostat) AHU total supply air flow rate AHU outdoor air flow rate Room total supply air flow rate Room outdoor air flow rate
The control system is user friendly	7 - Completely agree 6 5 4 3 2 1 - Completely disagree
Operating the control system takes too much of my time	7 - Completely agree 6 5 4 3 2 1 - Completely disagree

What are the key features a control system should include? (i.e., what makes a control system "good"?)
What are strengths of the system? And the weaknesses?
What changes would you make to improve the system?

3.3.4. Questionnaires – Solutions for Data Centres

System operator

I am aware of the control capabilities of the system	7 - Completely agree 6 5 4 3 2 1 - Completely disagree
I know how to adjust the system	7 - Completely agree 6 5 4 3 2 1 - Completely disagree
The system allows me to control all the parameters I would like to control	7 - Completely agree 6 5 4 3 2 1 - Completely disagree
The control system is user friendly	7 - Completely agree 6 5 4 3 2 1 - Completely disagree
Operating the control system takes too much of my time	7 - Completely agree 6 5 4 3 2 1 - Completely disagree

What are the key features a control system should include? (i.e., what makes a control system "good"?)
What are strengths of the system? And the weaknesses?
What changes would you make to improve the system?

IT staff

What are the most important environmental conditions the HVAC system in a Data Centre must provide? Temperature and humidity requirements: Air quality requirements:

How well does the system meet the temperature and humidity requirements (the ones you wrote above)?	7 – Very satisfied 6 5 4 3 2 1 – Very dissatisfied
How well does the system meet the air quality requirements (the ones you wrote above)?	7 – Very satisfied 6 5 4 3 2 1 – Very dissatisfied

What are strengths of the system? And the weaknesses?
What changes would you make to improve the system?

3.3.5. Questionnaires – Solutions for a geothermal system

System operator

I am aware of the control capabilities of the system	7 - Completely agree 6 5 4 3 2 1 - Completely disagree
I know how to adjust the system	7 - Completely agree 6 5 4 3 2 1 - Completely disagree
The system allows me to control all the parameters I would like to control	7 - Completely agree 6 5 4 3 2 1 - Completely disagree
The control system is user friendly	7 - Completely agree 6 5 4 3 2 1 - Completely disagree
Operating the control system takes too much of my time	7 - Completely agree 6 5 4 3 2 1 - Completely disagree

What are the key features a control system should include? (i.e., what makes a control system "good"?)
What are strengths of the system? And the weaknesses?
What changes would you make to improve the system?

4. Metrics and normalization factors

4.1. Energy Usage in Hospitals

Hospitals usually consist of large buildings, and careful control of their internal climate is considered as necessary. Substantial amount of heat is normally generated internally by the occupants and operating equipment. An effective cooling (and heating depending upon the external weather conditions) and ventilation systems combined with good insulation of hospital building usually reduce hospital's sensitivity to the outside weather. Hospitals also require standby electricity generators to ensure a continuous supply of power in emergencies and critical operations.

The typical hospital building is designed for long-term use and, in practice, is often used for longer periods than its builders ever intended. The actual lifetime is normally over 50 years. During this period, the building is retrofitted and renovated many times. Reasons for this include the shorter life of technical equipment, the development of new types of equipment and health care facilities, new regulations, new energy-saving technologies and the ageing of the building itself. These cause the coexistence of different technologies in different departments of the hospital.

In hospitals it is important to control the indoor climate which is one of the principal requirements. The indoor climatic requirements are determined by the hospital activities in the building. It is necessary to provide the required climate, ideally in the most economical way. In practice, energy efficiency is increasingly becoming an important requirement but medical considerations remain the top priority in the hospitals.

Hospitals purchase energy from outside in the form of fuels and electricity. Furnace oil/LPG/LDO/Gas is used for steam and hot water generation and other thermal applications such as catering and laundry facilities. In most of the hospitals, fuel oil (mainly high speed diesel) is mainly used for standby power generation sets which are used for considerable period due to inadequate power supply from the Utilities.

The electricity consumption depends upon the extent and complexity of equipment and services provided in the hospitals. New hospitals often have proportionately more air conditioning, with its associated chiller plant, and more extensive ventilation systems to maintain health care facilities and standards.

In hospitals, energy brought in, is converted by a number of conversion systems into several internal energy streams to meet heating, cooling and other medical equipment requirements, ('Power Quality Utilization Guide on Hospitals, Leonardo Energy, 2008) and there are energy saving opportunities in all the energy streams categorized as below:

- Electricity is used for a wide variety of purposes. Major electricity consumers in a hospital are cooling/heating equipment, lighting, air compressors, water pumps, fans and ventilation. Other applications include laundry equipment; kitchen and canteen equipments; ovens and geysers and medical equipments including autoclaves, office facilities such as computers and photocopiers, utilities such as lifts, refrigerators, water coolers, etc.

- Heat Stream is used in the form of steam and hot water. Steam is used in the kitchens and for humidification in HVAC and sterilization process. In addition steam is used to transport heat over longer distances. In many cases heat is transported from the heat generating station in the form of steam and then converted locally into central heating or hot tap water. Oil/Gas-fired boilers are used to generate steam and hot water.
- Compressed air can be divided into two main categories, namely medical air and technical air. Medical compressed air refers to the direct treatment and care of patients. Examples include breathing apparatus and surgical tools driven by the compressed air. The medical compressed air is subjected to very high standards for availability and quality. The technical compressed air is used for HVAC control systems, workshop applications or keeping containers under pressure.
- Cold Stream mainly takes the form of chilled water and is used for in-door climate control systems, for cooling and drying the ventilation air. In many cases cold stream is centrally generated by means of compression coolers. In combination with cogeneration, absorption-cooling machines are used to supplement compression coolers.

4.1.1. Major Electricity End-Users in Hospitals

HVAC System

In many large and centrally air-conditioned hospitals, HVAC systems may consume 40% of total electricity consumption. Air Conditioning and Ventilation system in hospitals is required for:

- Maintaining the requisite indoor temperature, air distribution and humidity levels for thermal comfort.
- Maintaining indoor air quality, particularly in areas requiring prevention of infection

HVAC equipment is grouped in the following categories:

- Space cooling: chillers, cooling towers and associated pumps;
- Space heating: boilers and associated pumps;
- Ventilation: AHU supply and return/exhaust fans;
- HVAC auxiliaries: water heating, miscellaneous pumps, and unitary equipment.

Building envelope design plays a very important role in the determination of HVAC capacity in the hospital.

LIGHTING

Lighting is a major electricity consumer next only to HVAC systems. Requirement of lights in a hospital varies widely depending upon the activity, time of day and the occupancy level. The complexity can be well understood from the simple fact that National Building Code (NBC) 2005 recommends Illuminance level varying from one lux for night lighting in some areas to 750 lux in operation theatres for general requirements. At times special lights are used with illuminance of 10,000- 50,000 lux in operation theatres.

WATER PUMPS

Water is consumed in different sections of the hospitals for various requirements. In most hospitals, water pumping systems may account for 5-15% of total electricity consumption and offer scope for reducing energy consumption.

OFFICE EQUIPMENT

Office equipment includes personal computers (PCs), printers, copiers, and fax machines

COMPUTER/ NETWORK EQUIPMENT

Computer/network equipment includes non-personal computers and servers.

MEDICAL EQUIPMENT

Specialized medical equipment includes magnetic resonance imaging (MRI) and computed tomographic scan (CT scan) equipment. A detailed general medical/laboratory equipment inventory was obtained from the respective pilot facility Clinical Engineering Department during the site survey.

PROCESS EQUIPMENT

Process equipment includes medical compressors, medical vacuum pumps and sterilizers, morgue refrigeration units, and building elevators.

KITCHEN/CAFETERIA EQUIPMENT

Kitchen/cafeteria equipment includes ovens, fryers, steamers, griddles, boilers and refrigerators.

LAUNDRY EQUIPMENT

Laundry equipment includes washers, dryers, and irons.

MISCELLANEOUS EQUIPMENT

Miscellaneous equipment consists of equipment not included in the previous six groups, including vending machines, water dispensers, and building elevators.

4.2. Performance metrics

4.2.1. Performance Metrics - Definition

There is often confusion about the term 'performance metric'. A metric is a standard definition of any measurable quantity, and a performance metric is a standard definition of a measurable quantity that indicates some aspect of performance. Performance metrics need certain characteristics to be valuable and practical. A performance metric should:

- Be measurable (or able to be determined from other measurements).
- Have a clear definition, including boundaries of the measurements.
- Indicate progress toward a performance goal.
- Answer specific questions about the performance.

Over the lifetime of buildings, several groups measure and analyse the energy performance for many reasons. Policy makers, owners, designers, operators, raters, and researchers, all use some form of energy performance data. Comparisons of energy use may be made among nations, regions, buildings, or systems within a building. However, methods and metrics used for comparisons are often inconsistent with each other. In addition, performance numbers are sometimes misrepresented or misused to predict energy savings beyond their accuracy. Performance metrics provide an accurate, standardized reporting of energy performance data so that we can compare "apples to apples." Clear, consistent, and accurate performance metrics help researchers understand what drives building energy performance, help designers and owners build and operate more efficient buildings, and help policy makers formulate meaningful performance goals and track progress toward those goals.

There are two levels or tiers of performance metrics can be used from the design stage through the operational life of a building. Tier 1 provides a high level view of building performance and can be derived from monthly and annual data such as those on utility bills. Tier 2 provides a detailed breakdown of the energy use and typically requires hourly or sub hourly sub metering. Performance indicators are above Tier 1 metrics, and they aggregate complex information to show planning level trends toward goals.

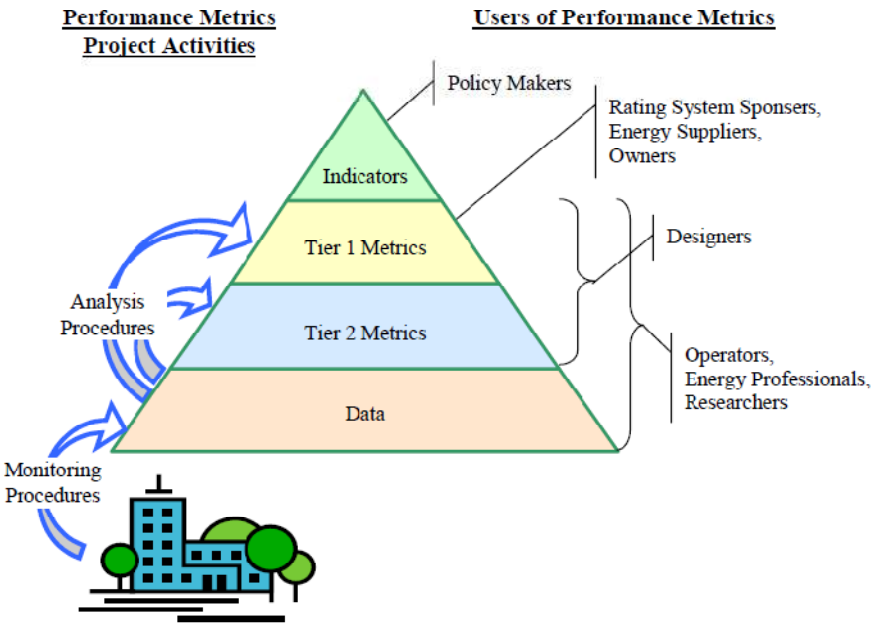

Figure 2 Graphical view of the users of performance metrics and overview of building performance evaluation. Source: (2005) M. Deru and P. Torcellini, "Performance Metrics Research Project – Final Report" Technical Report NREL/TP-550-38700

Performance metrics should be consistent with the performance objectives and performance goals of the projects. Performance metrics can be used with existing buildings or new building projects. Performance evaluation of existing buildings should start with a list of objectives. These objectives can be stated as questions about the performance. Performance metrics should be selected to answer these questions. The performance metrics must be directly related to the performance objectives. If the performance of the building is to be tracked or improved, specific performance goals should be set and performance metrics selected to measure progress toward the performance goals (Deru and Torcellini 2004).

4.2.2. Performance Metrics Set

In general, commercial buildings are large energy consumers similar to the hospitals. So it is important to specify the performance metrics that can be set in order to be useful to evaluate the energy behaviour of the building. In this section it is analysed all the possible performance metrics in commercial buildings that can also be used for hospitals.

Commercial building owners and operators have requested a standard set of key performance metrics to provide a systematic way to evaluate the performance of their buildings. The performance metrics provide standard metrics for the energy, water,

operations and maintenance, indoor environmental quality, purchasing, waste and recycling and transportation impact of their building. The metrics can be used for comparative performance analysis between existing buildings and industry standards to clarify the impact of sustainably designed and operated buildings.

The following tables include performance metrics for energy (Tab.2), water(Tab.3), operations and maintenance (Tab.4), indoor environmental quality (Tab.5), purchasing, waste and recycling (Tab.6) that could be used in commercial buildings, according to the survey of KM. Fowler, N. Wang, MP. Deru, RL. Romero, Performance Metrics for Commercial Buildings, NREL September 2010.

Table 7 illustrates the building features that can be used to normalize the building performance metrics for comparative analysis.

Table 2. Energy

Level 1	Level 2	Level 3	Level4	Reporting Units (SI)	Typical Data Source	Reporting Frequency
Total Building Energy Use				kWh/m², total& itemized by fuel type	Utility Bill	M
Total Building Energy Cost				cost/m², total& itemized by fuel type	Utility Bill	M
	Indoor Energy Use			kWh/m², total& itemized by fuel type	Utility Bill, Meter	M
	Indoor Energy Cost			cost/m², total& itemized by fuel type	Utility Bill ,Calculation	M
		Lighting Energy Use		kWh/m²	Meter	M
			Installed Lighting Energy Use	kWh/m², kWh/occupant	Meter	M
			Plug-in Lighting Energy Use	kWh/m², kWh/occupant	Meter	M
			Facade Lighting Energy Use	kWh/m² of façade area	Meter	M
		HVAC Energy Use		kWh/m², kWh/occupant, , total& itemized by fuel type	Meter	M
			Pump Energy Use	kWh/m², kWh/occupant	Meter	M
			Fan Energy Use	kWh/m², kWh/occupant	Meter	M
			Exhaust Fan Energy Use	kWh/m², kWh/occupant	Meter	M
			Chiller Energy Use	kWh/m², kWh/occupant	Meter	M
			Boiler Energy Use	kWh/m², kWh/occupant	Meter	M
			Reheat Coil Energy Use	kWh/m², kWh/occupant	Meter	M
			Heat Rejection Energy Use	kWh/m², kWh/occupant	Meter	M
			Purchased Chilled Water Energy Use	kWh/m², kWh/occupant	Meter	M
			Purchased Steam Energy use	kWh/m², kWh/occupant		
			Air Compressor Energy Use	kWh/m², kWh/occupant	Meter	M
			Freeze Protection Energy Use	kWh/m², kWh/occupant	Meter	M
		DHW Energy Use		kWh/m², kWh/occupant	Meter	M
		People mover Energy Use		kWh/ mover	Meter	M

			Elevator Energy Use	kWh/ mover	Meter	M
			Escalator/ Moving Sidewalk Energy Use	kWh/ mover	Meter	M
		Refrigeration Energy Use		kWh/m^2	Meter	M
			Refrigeration Compressor Energy Use	kWh/m^2, kWh/ occupant	Meter	M
			Refrigeration Condenser Energy Use	kWh/m^2, kWh/ occupant	Meter	M
			Refrigeration Evaporator/ Case fan Energy Use	kWh/m^2, kWh/ occupant	Meter	M
			Refrigeration Case Lighting Energy Use	kWh/m^2, kWh/ occupant	Meter	M
			Refrigeration Defrost Energy Use	kWh/m^2, kWh/ occupant	Meter	M
			Refrigeration Anti Sweat / Door Heater Energy Use	kWh/m^2, kWh/ occupant	Meter	M
		Cooking Energy Use		kWh/m^2	Meter	M
		Dishwasher Energy Use		kWh/m^2	Meter	M
		Plug Load Energy Use		kWh/m^2, kW/ m^2	Meter	M
		Data Centre Energy Use		kWh/m^2, kW/ m^2	Meter	M
		Other Building Energy Use		kWh/m^2, kW/ m^2	Meter	M
			Swimming Pool (hot water) Energy Use	kWh/m^2, kWh/ occupant	Meter	M
			Swimming Pool (Pump) Energy Use	kWh/m^2, kWh/ occupant	Meter	M
			Water Feature pump Energy Use	kWh/m^2, kWh/ occupant	Meter	M
			Laundry Energy Use	kWh/m^2, kWh/ occupant	Meter	M
		Industrial Process Energy Use		kWh/ unit production	Meter	M
		Cogeneration Fuel Use		kWh/m^2	Meter	M

		Cogeneration Electrical output		kWh/m^2	Meter	M
		Cogeneration Thermal output		kWh/m^2	Meter	M
			Cogeneration losses	% loss/total energy	Calculation	M
	Outdoor Energy Use			kWh/m^2, total& itemized by fuel type	Meter, Utility Bill	M
	Outdoor Energy Cost			Cost/site area	Calculation, Utility Bill	M
		Parking Lot Lighting Energy Use		kWh/ site area , kW/ site area ,	Meter	M
		Walkway Lighting Energy Use		kWh/ site area , kW/ site area ,	Meter	M
		Sign Lighting Energy Use		kWh/ site area , kW/ site area ,	Meter	M
		Landscape Lighting Energy Use		kWh/ site area , kW/ site area ,	Meter	M
		Outdoor Swimming pool Energy Use		kWh/ site area	Meter	M
	Landscape Energy Use			kWh/ site area	Operation and Maintenance Record	M
	Landscape Energy Cost			Cost/ site area	Operation and Maintenance Record	M
		Motorized Equipment Energy Use		Fuel m^3/ site area	Operation and Maintenance Record	M
		Electric Equipment Energy Use		kWh/ site area	Operation and Maintenance Record	M

Level 1	Level 2	Level 3	Level4	Reporting Units (SI)	Typical Data Source	Reporting Frequency
		Landscaping Greenhouse Gas Emissions		Kg Co2 / site area	Calculation	M
	Emergency Energy Use			kWh/ time, total& itemized by fuel type	Utility Bill, calculation	A
	Emergency Energy Cost			Cost/time,	Utility Bill, calculation	A
Building Peak Demand				kW, kW/m^2	Utility Bill	M
Building Peak Demand Cost				Cost , % peak demand /total bill	Utility Bill,	M
	Building Load Factor			Unitless	Calculation	M
Owner –generated Energy Production				kWh , % generated / total energy use	Utility Bill, Meter	M
	Thermal energy production			kWh , % generated / total energy use	Meter	M
	PV energy production			kWh , % generated / total energy use	Meter	M
	Wind energy production			kWh , % generated / total energy use	Meter	M
		Energy storage losses		kWh , % generated / total energy use	Meter	M
		Electrical generation system losses		kWh , % generated / total energy use	Meter	M
		Energy Export		kWh , % generated / total energy use	Meter	M
Net Building Energy Use				kWh/ m^2, total& itemized by fuel type	Utility Bill, Calculation	M

Net Building Energy Cost				Cost / m^2, total& itemized by fuel type	Utility Bill, Calculation	M
	Total Building Source energy use			kWh/ site area	Calculation	M
	Building Energy Greenhouse Gas Emissions			Kg Co2 /site area	Utility Bill	A
	Purchased Offsets			Kg Co2 /site area, cost .site area	Utility Bill	A
		Green Power/ Renewable energy credits		kWh /site area	Utility Bill	A
		Green power cost		Cost / kWh	Utility Bill	A
		Greenhouse Gas Emission Credits		Kg Co2 /site area	Operation and Maintenance Record	A
		Greenhouse Gas Emissions Credits costs		Cost /Kg Co2	Operation and Maintenance Record	A

Reporting Frequency:

M= Monthly

A= Annually

S= Spot Measurement

Table 3. Water

Level 1	Level 2	Level 3	Level4	Reporting Units (SI)	Typical Data Source	Reporting Frequency
Total Building Water Use				m^3/m^2	Utility bill	M
Total Building Water Cost				Cost/ m^2	Utility bill	M
	Indoor Potable Water use			m^3/m^2, m^3/occupant	Utility bill, Meter	M
	Indoor Potable water cost			cost/m^2, cost/occupant	Utility bill, calculation	M
		Restroom Potable Water use		m^3/m^2, m^3/occupant	Meter	M
			Sink water use	m^3/m^2, m^3/occupant	Meter	M
			Potable toilet water use	m^3/m^2, m^3/occupant	Meter	M
			Potable urinal water use	m^3/m^2, m^3/occupant	Meter	M
		Kitchen water use		m^3/m^2, m^3/meal	Meter	M
			Rinse sink water use	m^3/m^2, m^3/meal	Meter	M
			food-prep sink water use	m^3/m^2, m^3/meal	Meter	M
			Dishwasher water use	m^3/m^2, m^3/meal	Meter	M
			Ice marker water use	m^3/ 100 kg ice	Meter	M
		Shower facility water use		m^3/m^2, m^3/occupant	Meter	M
		Drinking fountain water use		m^3/m^2, m^3/occupant	Meter	M
		Janitorial water use		m^3/m^2, m^3/occupant	Meter	M
		Laundry water use		m^3/m^2, m^3/occupant	Meter	M
		Indoor washroom water use		m^3/time	Meter	M
			Indoor vehicle washdown water use	m^3/time	Meter	M
			Indoor equipment	m^3/time	Meter	M

			washdown water use			
	Indoor non potable water use			m^3/m^2, m^3/occupant	Meter	M
	Indoor non potable water cost			cost/m^2, cost/occupant	Calculation	M
		Restroom non potable water use		m^3/m^2, m^3/occupant	Meter	M
			Non potable toilet water use	m^3/m^2, m^3/occupant	Meter	M
			non potable urinal water use	m^3/m^2, m^3/occupant	Meter	M
	Outdoor potable water use			m^3/irrigated site	Meter, Utility bill	M
	Outdoor potable water cost			cost/irrigated site	Utility bill, calculation	M
		Outdoor potable landscape water use		m^3/irrigated site	Meter	M
		Outdoor non potable landscape water use		m^3/irrigated site	Meter	M
			Outdoor potable water feature water use	m^3/time	Meter	M
			Outdoor potable swimming pools water use	m^3/time	Meter	M
		Outdoor washdown water use		m^3/time	Meter	M
			Outdoor vehicle washdown water use	m^3/time	Meter	M

			Outdoor equipment washdown water use	m^3/time	Meter	M
	Outdoor non potable water use			m^3/m^2, m^3/occupant	Meter, utility bill	M
	Outdoor non potable water cost			cost/m^2, cost/occupant	utility bill, Calculation	M
		Outdoor non potable landscape water use		m^3/irrigated site	Meter	M
		Outdoor non potable non landscape water use		m^3/irrigated site	Meter	M
			Outdoor non potable water features water use	m^3/time	Meter	M
	Process water use			m^3/m^2, m^3/occupant	Meter, utility bill	M
	Process water cost			Cost/ m^2	utility bill, calculation	M
		Hydronic loop make up water use		m^3/m^2	Meter	M
			Chilled water cooling system make up water use	m^3/m^2	Meter	M
		Evaporative cooling system water use		m^3/m^2	Meter	M
			Cooling tower make up water use	m^3/m^2	Meter	M
			Evaporative space cooling system make up water use	m^3/m^2	Meter	M
		Pre-treatment process		m^3/m^2	Meter	M

		water use				
	Non potable water collection			m^3/time	Meter	M
	On site collected non potable water treatment cost			Cost/time	Operation and maintenance record	M
		Captured rain water		m^3/time	Meter	M
		Recycled grey water		m^3/time	Meter	M
		Condensate recovery		m^3/time	Meter	M
Total building wastewater production				m^3/m^2	Utility bill	M
Total building wastewater cost				Cost/ m^2	Utility bill	M
	Indoor wastewater production			m^3/m^2	Utility bill, meter	M
	Indoor wastewater cost			Cost/ m^2	Utility bill, calculation	M
	Outdoor wastewater production			m^3/m^2	Utility bill, meter	M
	Outdoor wastewater cost			Cost/ m^2	Utility bill, calculation	M
		Stormwater sewer production		m^3/irrigated site	Meter	M
		Stormwater sewer cost		cost/irrigated site	Utility bill, calculation	M
		Stormwater discharge		m^3/irrigated site	Meter	M
			Roof stormwater run –off retention time	In.time	calculation	M

Table 4. Operation and Maintenance

Level	Level 2	Level 3	Level 4	Reporting Units (SI)	Typical Data Source	Reporting Frequency
Operating cost				cost/m^2	Operation and Maintenance Record	A
	Building Liability Cost			cost/m^2	Operation and Maintenance Record	A
		Lawsuits		type of lawsuit; *t/ of* lawsuits; cost/year	Operation and Maintenance Record	A
		Insurance Cost		cost/m^2	Operation and Maintenance Record	A
	Equipment Operation Cost I.-			cost/m^2	Operation and Maintenance Record	A
		Equipment Repair Cost		cost/m^2; hours/service; jobs/year	Operation and Maintenance Record	A
		Operation Training Cost		cost/m^2	Operation and Maintenance Record	A
		Recommissioning Cost		cost/m^2	Operation and Maintenance Record	A
	Environmental Record Cost			cost/m^2	Operation and Maintenance Record	A
	Safety Record Cost			cost/m^2	Operation and Maintenance Record	A
	Churn Cost			cost/m^2	Operation and Maintenance Record	M
		Box Moves Cost		cost/move; hours/move: ratio of box moves/total move	Operation and Maintenance Record	M

		Furniture Moves Cost		cost/move; hours/move; ratio of furniture moves/total move	Operation and Maintenance Record	M
		Construction Moves Cost		cost/move ; hours/move; ratio of construction moves/total move	Operation and Maintenance Record	M
		IT Moves Cost (setting up phone, cable, etc.)		cost/move; hours/move; ratio of IT moves/total move	Operation and Maintenance Record	M
Maintenance Cost				cost/m^2	Operation and Maintenance Record	A
	Building Maintenance			cost/m^2; preventative maintenance/service call ratio	Operation and Maintenance Record	A
		Preventative Maintenance IPM)		cost/m^2; #of PM items; hours for PM; jobs/year	Operation and Maintenance Record	A
		Work Orders or service calls		cost/m^2 /#of Work Order items; hours for Work Order	Operation and Maintenance Record	M
			Type of Work Order	% by type	Operation and Maintenance Record	M
			Work Order Hazardous Materials Use	volume/m^2	Operation and Maintenance Record	M
			Work Order Material inventory	cost/m^2	Operation and Maintenance Record	M
		Diagnostic Maintenance Cost		cost/m^2: # of maintenance items;	Operation and Maintenance Record	A
			HVAC System Diagnostic Maintenance Cost	cost/time; hours/time	Operation and Maintenance Record	A
			Envelope Diagnostic Maintenance Cost	cost/time; hours/time	Operation and Maintenance Record	A
			Refrigeration Diagnostic Maintenance Cost	cost/time; hours/time	Operation and Maintenance Record	A
			Lighting Control System Diagnostic Maintenance Cost	cost/time; hours/time	Operation and Maintenance Record	A

			Other Highlighted Design Features or Materials Diagnostic Cost	cost/time; hours/time	Operation and Maintenance Record	A
		Special Projects Maintenance		cost/m²; hours/service; jobs/year	Operation and Maintenance Record	A
			Material Choices for Special Projects	cost/m²	Operation and Maintenance Record	A
		Emergency Maintenance Cost		cost/time	Operation and Maintenance Record	A
	Janitorial Services Cost			cost/m²	Operation and Maintenance Record	A
		Regular Cleaning		cost/m²: hours/service; jobs/year •	Operation arid Maintenance Record	A
			Special Cleaning	cost/m²; hours/service; jobs/year	Operation and Maintenance Record	A
			Janitorial Services Hazardous Materials Use	volume/m²	Operation and Maintenance Record	A
			Janitorial Services Materials Inventory	cost/m²	Operation and Maintenance Record	A
		Window Cleaning		cost/m²; hours/service; jobs/year	Operation and Maintenance Record	A
	Grounds Maintenance Cost			cost/site area	Operation and Maintenance Record	M
		Landscape Maintenance Cost		cost/m²; hours/service; jobs/year	Operation and Maintenance Record	M
			landscape Hazardous Materials Use	volume/site 2rea	Operation and Maintenance Record	M
			Landscape Maintenance Materials Inventory	cost/site area	Operation and Maintenance Record	M

		Parking Lot Maintenance Cost		cost/site area; hours/service; jobs/year	Operation and Maintenance Record	M
			Parking Lot Hazardous Materials Use	volume/site area	Operation and Maintenance Record	M
			Parking Lot Maintenance Materials Inventory	cost/site area	Operation and Maintenance Record	M

Table 5. Indoor Occupant Quality

Level 1	Level 2	Level 3	Level 4	Reporting units (SI)	Typical Data Source	Reporting Frequency
Overall Occupant Satisfaction				% satisfaction	Survey	A
	Occupant Satisfaction - Thermal Comfort			% satisfaction	Survey	A
		Satisfaction by floor		%satisfaction	Survey	A
			satisfaction by Gender	%satisfaction	Survey	A
			satisfaction by Age	%satisfaction	Survey	A
		Satisfaction by Space		%satisfaction	Survey	A
		Indoor Temperature by floor		°C	Measurement	M
			Indoor Temperature by space	°C	Measurement	M
			outdoor temperature	˚C	Measurement	M
			Indoor relative humidity by space	%	Measurement	M
			ventilation rate	ACH, m3/s	Measurement	M
			Time within thermal comfort range	time within/total occupied time	Measurement	A
	Occupant Satisfaction -			% satisfaction	Survey	A

	Lighting					
		Satisfaction by floor		% satisfaction	Survey	A
			satisfaction by Gender	% satisfaction	Survey	A
			satisfaction by Age	% satisfaction	Survey	A
		Satisfaction by Space		% satisfaction	Survey	A
		Illuminance Levels by Space		Lux	Survey	S
		Luminous Ratios by Space		ratio of object to background	Survey	S
	Occupant Satisfaction - Air Quality			% satisfaction	Survey	A
		Satisfaction by floor		% satisfaction	Survey	A
			satisfaction by Gender	% satisfaction	Survey	A
			satisfaction by Age	% satisfaction	Survey	A
		Satisfaction by Space		% satisfaction	Survey	A
		Carbon Dioxide Level by floor		Ppm	Measurement	A
			CO2 level by space	ppm	Measurement	S
		Carbon Monoxide Level by floor		Prim	Measurement	S
			CO level by space	ppm	Measurement	S
		Volatile Organic compound level by floor		Ppm	Measurement	S
			VOC level by space	Ppm	Measurement	S
	Occupant Satisfaction - Acoustics			% satisfaction	Survey	A
		Satisfaction by Floor		% satisfaction	Survey	A
			Satisfaction by Gender	% satisfaction	Survey	A
			Satisfaction by Age	%satisfaction	Survey	A

		Satisfaction by Space		% satisfaction	Survey	A
		Sound levels by floor		dB	Measurement	S
			Sound level by space	dB	Measurement	S
	Occupant Satisfaction - Maintenance			% satisfaction	Survey	A
		Satisfaction by floor		%satisfaction	Survey	A
			satisfaction by Gender	% satisfaction	Survey	A
			satisfaction by Age	% satisfaction	Survey	A
		Satisfaction by Space		% satisfaction	Survey	A
	Occupant Satisfaction - Cleanliness			% satisfaction	Survey	A
		Satisfaction by floor		% satisfaction	Survey	A
			satisfaction by Gender	% satisfaction	Survey	A
			satisfaction by Age	% satisfaction	Survey	A
		Satisfaction by Space		% satisfaction	Survey	A
	Occupant Satisfaction - Functionality			% satisfaction	Survey	A
		Satisfaction by floor		% satisfaction	Survey	A
			satisfaction by Gender	% satisfaction	Survey	A
			satisfaction by Age	% satisfaction	Survey	A
		Satisfaction by Space		% satisfaction	Survey	A
	Occupant Satisfaction - Safety and Security			% satisfaction	Survey	A
		Satisfaction by floor		% satisfaction	Survey	A
			satisfaction by Gender	% satisfaction	Survey	A
			satisfaction by Age	% satisfaction	Survey	A
		Satisfaction by Space		% satisfaction	Survey	A
	Occupant Satisfaction – Privacy			% satisfaction	Survey	A

		visual privacy		% satisfaction	Survey	A
		Conversational privacy		% satisfaction	Survey	A
		Satisfaction by floor		% satisfaction	Survey	A
		Satisfaction by Space		% satisfaction	Survey	A
Turnover rate				% turnover	Personnel record	A
			turnover by gender	% turnover	Personnel record	A
			turnover by age	% turnover	Personnel record	A
			turnover by space	% turnover	Personnel record	A
Absenteeism				Days	Personnel record	A
			Absenteeism by gender	Days	Personnel record	A
			Absenteeism by age	Days	Personnel record	A
			Absenteeism by space	Days	Personnel record	A

Table 6. Purchasing, Waste and Recycling

Level 1	Level 2	Level 3	Level 4	Reporting Units	Typical Data Source	Reporting Frequency
Waste and recycling				kg/m^2,kg/occupant, CO2 e/m2,ratio of recycled		M
				materials to sanitary waste	Utility Bill, Calculation	M
Waste and Recycling Cost				cost/m2, cost/occupant	Utility Bill	M
	Solid Sanitary Waste			kg/m2, cost/occupant, CO2 e/m2	Utility Bill, Calculation	M
	Solid **Sanitary** Waste Cost			cost/m2, cost/occupant	Utility Bill	M
	Recycled Materials			kg/m2, cost/occupant, CO2 e/m2	Calculation, Operation and Maintenance Record	M
	Recycled Materials Cost			cost/m2, cost/occupant	Calculation, Operation and Maintenance Record	M
		Recycled **Metals**		kg/m2, kg/occupant, ratio of recycled metals to		
				Total recycled materials	Operation and Maintenance Record	M
		Recycled Metals Cost		cost/m2, cost/occupant	Operation and Maintenance Record, Calculation	M
		Recycled Paper		kg/m2, kg/occupant, ratio of recycled paper to		
				total recycled materials	Operation and Maintenance Record	M
		Recycled Paper Cost		cost/m2, cost/occupant	Operation and	M

					Maintenance Record, Calculation	
		Recycled Cardboard		kg/m2, kg/occupant, ratio of recycled cardboard to		
				total recycled materials	Operation and Maintenance Record	M
		Recycled Cardboard Cost		cost/m2, cost/occupant	Operation and Maintenance Record, Calculation	M
		Recycled Office Products		kg/m2, cost/occupant	Operation and Maintenance Record	M
		Recycled Office Products Cost		cost/m2, cost/occupant	Operation and Maintenance Record, Calculation	M
			recycled kger cartridges	kg/m2, cost/occupant	Operation and Maintenance Record	M
			recycled kger cartridges cost	cost/m2, cost/occupant	Operation and Maintenance Record, Calculation	M
			recycled phones	kg/m2, cost/occupant	Operation and Maintenance Record	M
			recycled phones cost	cost/m2, cost/occupant	Operation and Maintenance Record, Calculation	M
			Recycled charging equipment and batteries	kg/m2, cost/occupant	Operation and Maintenance Record	M
			Recycled charging equipment and	cost/m2, cost/occupant	Operation and Maintenance Record,	M

			batteries cost		Calculation	
			recycled displays	kg/m2, cost/occupant	Operation and Maintenance Record	M
			recycled displays cost	cost/m2, cost/occupant	Operation and Maintenance Record, Calculation	M
			recycled computers	kg/m2, cost/occupant	Operation and Maintenance Record	M
			recycled computers cost	cost/m2, cost/occupant	Operation and Maintenance Record, Calculation	M
			recycled printing/fax machines	kg/m2, cost/occupant	Operation and Maintenance Record	M
			recycled printing/fax machines cost	cost/m2, cost/occupant	Operation and Maintenance Record, Calculation	M
			recycled image projection (TV, projectors)	kg/m2, cost/occupant	Operation and Maintenance Record	M
			recycled image projection cost (TV, projectors)	cost/m2, cost/occupant	Operation and Maintenance Record, Calculation	M
		Recycled Others (Glass, Plastic, Batteries, etc.)		kg/m2, kg/occupant, ratio of recycled others to		
				total recycled materials	Operation and Maintenance Record	M
		Recycled Others Cost (Glass, Plastic,		cost/m2, cost/occupant	Operation and Maintenance Record,	M

		Batteries, etc.)			Calculation	
	Reused/refurbished materials			kg/m2, cost/occupant	Operation and Maintenance Record	M
	Reused/refurbished materials cost			cost/m2, cost/occupant	Operation and Maintenance Record, Calculation	M
	Compost food waste			kg/occupant	Operation and Maintenance Record	M
	Compost food waste cost			cost/occupant	Operation and Maintenance Record, Calculation	M
	Landscape Debris			kg/m2 site area	Operation and Maintenance Record	A
	Landscape Debris cost			cost/m2 site area	Operation and Maintenance Record, Calculation	A
		Composted Landscape Debris		kg/m2 site area	Operation and Maintenance Record	A
		Composted Landscape Debris Cost		cost/m2 site area	Operation and Maintenance Record, Calculation	A
		Disposed Landscape Debris		kg/m2 site area	Operation and Maintenance Record	A
		Disposed Landscape Debris Cost		cost/m2 site area	Operation and Maintenance Record, Calculation	A
	Building modification waste			kg/m2	Operation and Maintenance Record	A
	Building modification			cost/m2	Operation and	A

	waste cost				Maintenance Record, Calculation	
		Recycled Building Modification Waste		kg/m2	Operation and Maintenance Record	A
		Recycled Building Modification Waste Cast		cost/m2	Operation and Maintenance Record, Calculation	A
			Recycled Budding Modification Concrete	kg/m2	Operation and Maintenance Record	A
			Recycled Building Modification Concrete Cost	cost/m2	Operation and Maintenance Record, Calculation	A
		Disposed Building Modification Waste		kg/m2	Operation and Maintenance Record	A
		Disposed Building Modification Waste Cost		cost/m2	Operation and Maintenance Record, Calculation	A
	Hazardous waste			kg/m2, kg/occupant	Operation and Maintenance Record	M
	Hazardous waste cost			cost/m2	Operation and Maintenance Record, Calculation	M
			F list (Non-secure Specific Waste)	kg/m2, kg/occupant	Operation and Maintenance Record	M
			F list (Non-secure Specific Waste) costs	cost/m2	Operation and Maintenance Record, Calculation	M
			K list (Source Specific Waste)	kg/m2, kg/occupant	Operation and Maintenance Record	M

			K list (Source Specific Waste) costs	cost/m2	Operation and Maintenance Record, Calculation	M
			P&U List (Commercial Chemical Products)	kg/m2, kg/occupant	Operation and Maintenance Record	M
			P&U List (Commercial Chemical Products) costs	cost/m2	Operation and Maintenance Record, Calculation	M
Total purchases cost				cost of purchases	Purchasing Record	A
Environmentally Preferable purchases				% cost of EPP/total cost of purchases	Purchasing Record	A
	Office Materials Purchases			% cost of EPP/total cost of purchases	Purchasing Record	A
		Paper purchases		% cost of EPP/total cost of purchases	Purchasing Record	A
		Plastic Office Products Purchases		% cost of EPP/total cost of purchases	Purchasing Record	A

Level 1	Level 2	Level 3	Level 4	Reporting units	Typical Data Source	Reporting Frequency
		Electronic Equipment Purchases		% cost of EPP/total cost of purchases	Purchasing records	A
			Toner Cartridges Purchases	% cost of EPP/total cost of purchases	Purchasing records	A
			Phones Purchases	% cost of EPP/total cost of purchases	Purchasing records	A
			Charging Equipment and Batteries Purchases	% cost of EPP/total cost of purchases	Purchasing records	A
			Displays Purchases	% cost of EPP/total cost of purchases	Purchasing records	A
			Computers Purchases	% cost of EPP/total cost of purchases	Purchasing records	A
			Printing/ fax Machines	% cost of EPP/total cost	Purchasing records	A

			Purchases	of purchases		
			Image Projection (TV, projector Purchases)	% cost of EPP/total cost of purchases	Purchasing records	A
		Office Furniture Purchases:		% cost of EPP/total cost of purchases	Purchasing records	A
	Facilities Operation and Maintenance					
	Purchases			% cost of EPP/total cost of purchases	Purchasing record, Operation and Maintenance Record	A
		Cleaning Products Purchases		% cost of EPP/total cost of purchases	Purchasing record, Operation and Maintenance Record	A
			Tissue Purchases	% cost of EPP/total cost of purchases	Purchasing record, Operation and Maintenance Record	A
			Plastic Bags Purchases	% cost of EPP/total cost of purchases	Purchasing record, Operation and Maintenance Record	A
		Construction and Renovation Materials Purchases		% cost of EPP/total cost of purchases	Purchasing record, Operation and Maintenance Record	A
			Concrete Purchases	% cost of EPP/total cost of purchases	Purchasing record, Operation and Maintenance Record	A
		Appliances Purchases		% cost of EPP/total cost of purchases	Purchasing record, Operation and Maintenance Record	A
		General Maintenance Products Purchases		% cost of EPP/total cost of purchases		
			General Maintenance lake, Oil, Hydraulic, Grease	% cost of EPP/total cost of purchases	Purchasing record, Operation and Maintenance Record	A
			purchase	% cost of EPP/total cost of purchases	Purchasing record, Operation and Maintenance Record	A
			Adhesives and Coatings Purchases	% cost of EPP/total cost of purchases	Purchasing record, Operation and Maintenance Record	A
			Aerosols Purchases	% cost of EPP/total cost of purchases	Purchasing record, Operation and Maintenance Record	A
			De-icer Purchases	% cost of EPP/total cost of purchases	Purchasing record, Operation and Maintenance Record	A
	Transportation Purchases			% cost of EPP/total cost of purchases	Purchasing record, Operation and Maintenance Record	A
		Fleet Vehicle Ratio		% alternative fuel vehicles/regular fuel vehicles,	Purchasing record, Operation and Maintenance Record	A
				% cost of alternative vehicle/total cost of	Purchasing record, Operation and Maintenance Record	A

				vehicles		
		Fleet Vehicles Alternative Fuel		% cost of EPP/total cost of purchases	Purchasing record, Operation and Maintenance Record	A
		Fleet Vehicle Maintenance Products Purchases		% cost of EPP/total cost of purchases	Purchasing record, Operation and Maintenance Record	A
			Fleet Vehicle Maintenance Lube, Oil, Hydraulic			
			Grease Purchases	% cost of EPP/total cost of purchases	Purchasing record, Operation and Maintenance Record	A
	Landscape Materials Purchases			% cost of EPP/total cost of purchases	Purchasing record, Operation and Maintenance Record	A
	Food Services Purchases			% cost of EPP/total cost of purchases	Purchasing record, Operation and Maintenance Record	A
		Food Service Appliances Purchases		% cost of EPP/total cost of purchases	Purchasing record, Operation and Maintenance Record	A
			Disposable Containers, Cutlery, etc. Purchases	% cost of EPP/total cost of purchases	Purchasing record, Operation and Maintenance Record	A

BUILDING FEATURES

Level 1	Level 2	Level 3	Level 4	Context Comparability
General				
Building Location	Functional Area by Space	Climate Zone	Occupant Gender Ratio	Ratings or Awards
Building Type and Function	Conditioned Floor Area	Heating Degree Days	Total Façade Area	Building Floor plans
Year of Building First Occupied	Semi-Conditioned Floor Area	Cooling Degree Days	Total Roof Area	Key Building Features/Design Intent
Year of Last Major Renovation	Unconditioned Floor Area		Vegetated Roof Area	Type of Occupant
Total Number of Regular Occupants	Lighted Floor Area		Stormwater Flow Rate	Specialized Equipment Type and Efficiency (e.g. Refrigerator)
Number of Regular Visitors			Age Group of Occupants	Number of Floors
Gross Floor Area				Number of Underground Floors
Rentable Area				Gross Ground Floor Footprint
				Roof Type
				Fenestration-to-Wall Ratio
				Skylight-to-Floor Area Ratio
				Insulation Type and Thickness
				Opaque Wall Area
				Window Area
				Skylight Area
Utilities				
Electric Utility		Insurance Provider		Water Utility
Electricity Rate Structure				Water Rate Structure
Gas Utility				Waste and Recycling Management Company
Gas Rate Structure				Other Utilities
				Cogeneration System Type and Fuel Source
				Cogeneration System Peak Capacity (Electrical and Thermal)
				Renewable Energy System Type and Capacity
				Irrigation Water Source
				Stormwater System Features
Operation				
Operating Schedules (Building)			Operating Schedules (Lighting)	Operational Concerns
			Operating Schedules (HVAC)	Key Policies (PTO, Recycling, Transportation)
			Operation Schedule (Data Center)	Type of Maintenance Practices (Preventative, Predictive, Reactive, etc)
			Hours of Operation (Water Feature)	Number of Maintenance Staff
			Hours of Operation (Swimming Pool)	Maintenance Schedule
				Cleaning Schedule
				Number and Type of Fleet Vehicles
				Number and Type of Landscape Vehicles
Systems				
	Lighting Systems			
			Lamp/Fixture Type and Count by Space	Whole Building Installed Lighting Power Density
			Lamp/Fixture Wattage	Installed Lighting Power Density by Space
				Daylighting Controls (Yes/No)
				Occupancy Sensors (Yes/No)
	HVAC and Hot Water Systems			
			Cooling Equipment Capacity and Efficiency	HVAC System Types (List all systems by space)
			Heating Equipment Capacity and Efficiency	Cooling System (List all systems by space)
			Air Handling Unit Capacity	Heating System (List all systems by space)
			Pump Sizes	Air Distribution (List all systems by space)
			Cooling Tower Size	HVAC Control System (Local or Building Automation System)
			Economizers	Ventilation Rate
			Thermostat Set Points by Space	Piping Insulation
			Humidity Control Set Points by Space	Domestic Hot Water Tank Year, Efficiency, and Capacity
			Minimum Ventilation Rates	
	Data Center and Plug Loads			
			Data Center PUE	Average Plug Load Density
			Data Center Cooling Energy Source	
	Water Systems			
		Number of Plumbing Fixtures	Bathroom Fixture Efficiency and Frequency of Use	Major Water Features
			Kitchen Fixture Efficiency and Frequency of Use	
			Kitchen Appliance Efficiency and Frequency of Use	
			Washdown Fixture Efficiency and Frequency of Use	
			Swimming Pool Volume	
			Water Feature Volume	
Site Features				
Total Building Site Area	Irrigated Site Area	Lighted Parking Lot Area		Hard Site Surface Area
	Stormwater Best Management Practices			Permeable Site Surface Area
				Number of Outdoor Parking Spaces
				Number of Parking Garage Spaces

Notes:

- *Normalization factors for multiple categories*
- *Building features not used for normalization*
- *Normalization factors for Energy*
- *Normalization factors for Water*
- *Normalization factors for IEQ*
- *Normalization factors for O & M*

Table 7 . Building Features

4.2.3. Recommended Building Performance Metrics

A building performance metric can be defined as a key performance indicator which may be compared to historical or expected values to describe building performance. A metric may indicate the energy cost per unit. These metrics may be tracked through a building's energy information system (EIS), building automation system (BAS), a BAS overlay, or spread sheet tools. There are some differing views in the industry concerning how to define a metric. Many sources and practitioners define a point (such as chiller power or fan m3/min) to be a metric. However, to be defined as a metric, data must be able to provide significant information about the buildings performance and stand on its own without additional supporting data or context. Example metrics include building energy use intensity (EUI) which describes the energy use of a facility per unit area, or chiller plant efficiency (kW/kg). These metrics stand alone in their ability to clearly indicate performance without additional analysis.

Metrics are broken into two different categories: energy metrics and system metrics.

- Energy Metrics –use data from energy meters or sub-meters only
- System Metrics – require additional data, such as inputs from the BAS, information from a maintenance management system, or user entered values.

Furthermore, recommended metrics are broken into four categories:

- Basic Energy Metrics: Metrics that use whole building utility meter data. These metrics are relatively easy to track, and should be tracked by all buildings
- Advanced Energy Metrics: Metrics that use whole building utility meter data but require more advanced analysis than basic energy metrics, or metrics that require additional meters beyond whole building energy use meters.
- Basic System Metrics: Metrics that use existing points from the BAS or maintenance management system. These metrics are relatively easy to track
- Advanced System Metrics: Metrics that require additional points to be added to the BAS or maintenance management system. This category also includes metrics that use both meter data and BAS data.

PREDICTOR VARIABLES

Following the definition stated in the framework of eeMeasure project (Deliverable D2.1 Non residential methodology), a predictor variable is any factor that has a significant impact on energy use. When reference is made to a Predictor Variable, the implication is that it has an impact on demand. These variables can be used as normalization factors.

In general, all buildings should consider tracking basic energy and system metrics and buildings that are seeking to achieve higher performance should also include some or all the

advanced metrics. If a building has special needs additional metrics should be considered. A variety of different normalization factors and time scales can be used for these metrics. Common additional normalizing factors are heating and cooling degree days, operating hours, and number of occupants. The most common factors are given in Table 8 as well as suggestions to improve granularity, but each facility should adapt the metrics as needed.

Table 8: Normalizing Variables

Factor	Source
Annual Hours of Operation	**National Standards**
Full-time Equivalent Workers	**ASHRAE Standard 105**
Full-time Equivalent Students	**ASHRAE Standard 105**
Number Licensed Hospital Beds	**ASHRAE Standard 105**
Food Service Seating Capacity	**ASHRAE Standard 105**
Number of PCs	**ASHRAE Standard 105**
Weekly Hours of Operation	**ASHRAE Standard 105**
Annual Months of Operation	**ASHRAE Standard 105**
Area Computer Centers	**ASHRAE Standard 105**
Annual Average W/area Computer Centers	**ASHRAE Standard 105**
Percent Gross Floor Area Heated	**ASHRAE Standard 105**
Percent Gross Floor Area Cooled	**ASHRAE Standard 105**
Heating Degree Days	**ASHRAE Standard 105**
Cooling Degree Days	**ASHRAE Standard 105**
Area Parking Garages	**ASHRAE Standard 105**
Natatorium Space	**ASHRAE Standard 105**
Annual Peak Electric Demand	**ASHRAE Standard 105**
Electricity Generation Capacity	**ASHRAE Standard 105**
Annual Electricity Generation	**ASHRAE Standard 105**
Equipment Capacity	**Strategies for Energy Benchmarking In Clean rooms and Laboratory-Type Facilities**
Average Monthly Temperature	**NBI**

(1) Basic Energy Metrics

The basic energy metrics, shown in Table 9, are intended to provide a general picture of building energy use. Metrics from this list indicate the whole building gas and electric energy use as well as utility costs. They do not require any more data than what can be gathered from a typical utility bill, and though a metric tracking tool would simplify calculation and analysis, it is not required. Metrics are normalized by building area and, for whole building energy use, operating hours. The metrics presented show annual metric calculation as a minimum standard but it is recommended that these metrics be looked at on a monthly basis with a bi-annual in-depth review. At a monthly review the owner should calculate the metric for the previous 12 months (e.g. kWh / m2-yr) and also calculate it on a monthly basis (e.g. kWh / m2-month) for the preceding months. Metrics of this sort can be easily benchmarked when the building is benchmarked.

Table 9: Basic Energy Metrics

System Type	Sub-system	Metric	Units
Whole Building	NA	Energy Use	**kWh /m^{2-}yr**
	NA	Energy Use	**kWh / annual operating hours-m^2-yr**
	Electric	Energy Use	**kWh / m^2-yr**
	Gas	Energy Use	**kWh / m^2-yr**
	Electric	Utility Cost	**€/ m^2-yr**
	Gas	Utility Cost	**€/ m^2-yr**

(2) Advanced Energy Metrics

The advanced energy metrics, shown in Table 10, provide a more in-depth look at how a building is using energy. Many of these metrics require additional energy sub-meters, a more detailed review of utility bills, or additional calculations. As in other sections the building owner may consider analysing these metrics on smaller time scales or using other normalizing factors. Some of these metrics allow the building to analyse electric use and demand as well as associated costs. These can point to opportunities for a building to reduce peak demand and to further reduce costs. In particular the facility load factor can help indicate if the peak demand is considerably different than typical demand. The emissions metric can help quantify the carbon emissions associated with gas and electric use. Heating and cooling metrics that are calculated on a monthly basis will see significant month-to-month changes due to seasonal weather variations. These metrics, in particular, should consider normalizing based on ambient conditions and should be compared to benchmarks and baselines that account for seasonal variation. Other metrics, such as lighting and plug loads, will, in most cases, only have marginal variation across seasons. Other metrics require sub-metering and indicate the performance of total HVAC, components of HVAC, and

lighting systems. Note that these metrics combine gas and electric energy uses (such as for heating or in an absorption chiller) but that metrics could be further broken down to include separate gas and electricity terms. Metrics are also provided for plug loads and people movers (such as elevators and escalators).

Table 10: Advanced Energy Metrics

System **Type**	**Sub-system**	**Metric**	**Units**
Whole Building	NA	Energy Use Cost (excluding demand)	**€/ m^2-yr**
	Electric	Electric Demand - Peak	**kW / m^2-month**
	Electric	Electric Demand Cost	**€/ m^2-month**
	Electric	Net facility load factor	**kW(avg) / kW(peak)**
	NA	Atmospheric emissions	**kg / m^2-yr**
HVAC	Heating	Energy Use	**kWh / m^2-yr**
	Heating	Energy Use Cost	**€/ m^2-yr**
	Heating	Electric Demand - Peak	**kW / m^2-month**
	Heating	Electric Demand Cost - Peak	**€/ m^2-month**
	Cooling	Energy Use	**kWh /m^2-yr**
	Cooling	Energy Use Cost	**€/ m^2-yr**
	Cooling	Electric Demand - Peak	**kW / m^2-month**
	Cooling	Electric Demand Cost - Peak	**€/ m^2-month**
	Ventilation	Energy Use	**kWh / m^2-yr**
	Ventilation	Energy Use Cost	**€/ m^2-yr**
	Fans and pumps*	Energy Use	**kWh / m^2-yr**
	HVAC Eqpm + common auxiliaries**	Energy Use	**kWh / m^2-yr**
Lighting	NA	Energy Use	**kWh / m^2-yr**
	NA	Energy Use Cost	**€/ m^2-yr**
	NA	Electric Demand - Peak	**kW / m^2-month**
	Exterior	Energy Use	**kWh / m^2-yr**
	Interior	Energy Use	**kWh / m^{2}yr**
	Interior - Daylight Zones	Energy Use	**kWh /m^2-yr**
	Interior - Non-Daylight Zones	Energy Use	**kWh / yr**
	Interior	Electric Light Reduction Ratio	**kWh(daylight area)/yr- m^2 / kWh(non-daylight area)/yr-m^2**

Plug Loads	NA	Energy Use	**kWh / m^2-yr**
Plug Loads	NA	Energy Use Cost	**€/ m^2-yr**
People Movers	NA	Energy Use	**kWh / m^2-yr**
	NA	Energy Use Cost	**€/ m^2-yr**
Domestic Hot Water	NA	Energy Use	**kWh / m^2-yr**
	NA	Energy Use Cost	**€/ m^2-yr**

*If not covered in cooling, heating, and ventilation.

**Auxiliaries include equipment that serves multiple HVAC systems. E.g., control air compressors.

(3) Basic System Metrics

The basic system metrics, shown in Table 11, use information already available in the BAS to expand the owner's understanding of building performance. Based on the complexity of most system metrics we believe that only two metrics belong to this table, both of which are methods of tracking comfort. The facility may choose to track one or both of these metrics. It is recommended that these metrics be assessed on a monthly basis. The comfort metrics will likely be compared to internal targets. The 'Percent of Hours Uncomfortable' metric can be used to track how frequently zones deviate from an acceptable set point range. This metric should be tracked on a zone-by-zone basis to pin point problem areas and may be averaged over the building to indicate general performance. As displayed in the table a score of zero indicates excellent performance, the metric could be changed to indicate 'Percent of Hours Comfortable' to reverse the scale. The 'Comfort Index' metric was developed by Tom (2008) and uses an arbitrary 100 point scale, with 100 considered as perfect, to describe comfort based on the points available in the building. For example, if a zone only had a temperature sensor, the building might decide to score hours where the zone temperature ranges between 72 and 76°F with 100 points. Perhaps temperatures between 70 and 71 or 77 and 78 would score 90 points, and so on. If the room had humidity sensors and/or CO2 sensors scores could be developed for different temperature and humidity conditions. In this way the building can measure how far outside of comfort conditions it is. The metric should be calculated at all zones and may be averaged across the building and time frame of interest.

Table 11: Basic System Metrics

System **Type**	**Sub-system**	**Metric**	**Units**
Whole Building	NA	PMV	**FROM -3 TO 3**
	NA	PPD	**%**
	NA	% Hours uncomfortable	**% hours outside of space temperature range**
	NA	Comfort Index	**Average comfort index (0-100)***

*Based on at least space temperature, may include other factors like CO2 and humidity

According to ASHRAE 55 and UNI EN 7730 two major indexes may be included.

- Predicted Mean Vote (PMV): an index that predicts the mean value of the votes of a large group of people on the 7-point thermal sensation scale.
- Predicted Percentage of Dissatisfied (PPD): an index that establishes a quantitative prediction of the percentage of thermally dissatisfied people determined from PMV.

There are six primary factors that must be addressed when defining conditions for thermal comfort

1. Metabolic rate.
2. Clothing insulation.
3. Air temperature.
4. Radiant temperature
5. Air speed.
6. Humidity.

All six of these factors may vary with time. However, this standard only addresses thermal comfort in steady state. People who have prior exposure to different environmental conditions and/or activity levels may not find the conditions allowed in this standard comfortable upon entry to the space. The effect of prior exposure or activity may affect comfort perceptions for approximately one hour.

The ASHRAE thermal sensation scale which was developed for use in quantifying people's thermal sensation, is defined as follows. It is based on the assumptions that people voting +2, +3, -2, or -3 on the thermal sensation scale are dissatisfied, and on the simplification that PPD is symmetric around a neutral PMV

+3 hot

+2 warm

+1 slightly warm

0 neutral

-1 slightly cool

-2 cool

-3 cold

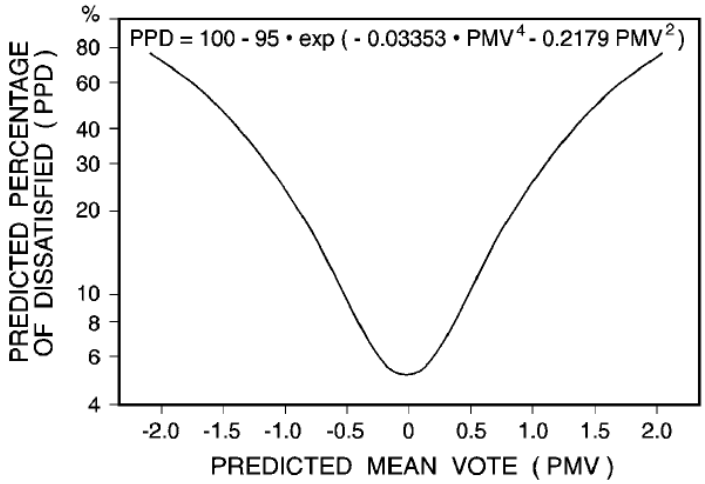

Figure 3 Predicted percentage dissatisfied (PPD) as a function of predicted mean vote (PMV).

Three classes of acceptable thermal environment for general comfort are defined as reported below.

Comfort Class	PPD	PMV Range
A	< 6	-0.2 < PMV < + 0.2
B	< 10	-0.5 < PMV < + 0.5
C	< 15	0.7 < PMV < + 0.7

These factors can be calculated according to BSR/ASHRAE Standard 55P.

(4) Advanced System Metrics

The advanced system metrics, shown in Table 12, contain more detailed information concerning building energy use, comfort, and maintenance. Some metrics will require additional sub-metering and points; other will require data entry from other sources. A notable metric in this table, chiller plant efficiency, indicates the performance of a highly energy intensive process. The environmental quality and maintenance metrics should be evaluated at least annually, if not more frequently. It is recommended that the plant and ventilation metrics be evaluated monthly. The indoor environmental quality (IEQ) metric describing absenteeism provides a basis for understanding occupant health which can be linked to building comfort and can be compared to past performance and goals. The availability of this sort of data may vary from facility to facility depending on the willingness of human resources departments to share these data.

The maintenance metrics will require data entry from a computerized maintenance management system (CMMS) or other source of maintenance records. They indicate the

resources devoted to maintenance and help to show how efficient the maintenance program is. These metrics may be more interesting when correlated with other metrics, for example if maintenance costs increase while comfort metrics improve, the trade-off may be worthwhile but if maintenance costs increase while energy use is also increasing it will likely be that equipment is not being run properly. The maintenance cost metric can be benchmarked against data available in the BOMA Experience Exchange Report (EER). The maintenance metrics will likely be compared against past performance and goals. The heating and cooling plant efficiencies require additional sub-metering and points, and provide a clear indication of plant performance. These efficiencies include all equipment associated with the plant, such as chillers and pumps. NBI (2009) provides a chart that can be used to benchmark chiller plant performance and ASHRAE Guideline 22-2008 provides additional information on monitoring chiller plant efficiency. In calculating these metrics the building will need to track not only energy in to the chiller and boiler plant equipment (determined with sub-meters) but also the energy delivered by the plant. To determine the energy delivered the facility must be able to monitor supply and return water temperatures and flow. These metrics should be evaluated monthly with at least an average efficiency and potentially charts showing daily or hourly efficiency. With additional sub-metering and points fan efficiency can also be monitored. In this case a flow meter will be necessary to determine air flow delivered. This metric could be compared against manufacturer's data or past performance. Additionally, the outside air (OA) m3/min delivered per person can be analysed to indicate ventilation to the space. Analysing outdoor airflow will require either a flow meter or a virtual point correlating fan speed with a fan curve to produce a flow rate. Occupancy can be estimated and updated as the building's use changes. The m3/min per person metric will not deliver an exact measurement but can help approximate air delivered in a simple fashion. The term may be averaged during occupied hours for the time period being evaluated.

Table 12: Advanced System Metrics

System **Type**	**Sub-system**	**Metric**	**Units**
Whole Building	NA	IEQ	**# sick absences / occupant-yr-m^2**
	NA	Maintenance	**€ spent on maint / yr**
	NA	Maintenance	**hrs spent on maint / yr**
Whole Building	NA	Maintenance	**# maint requests (by type) / yr**
HVAC	Heating	Heating Plant Efficiency	**kWh/h(out) / kWh/h(in)**
	Cooling	Cooling Plant Efficiency	**kW / kg***
	Ventilation	Fan System Efficiency	**kW / m^3/s**
	Ventilation	Outside air ventilation	**OA m^3/min / person‡**

*kW of entire plant, not just chiller.

**kW of all fans combined (e.g., supply, return, exhaust), m3/min of supply air

‡Average monthly OA m3/min / person, during occupied hours operating in minimum outside air (non-airside economizer) mode.

A summary of the Metrics presented is reported in Table 13.

Table 13: All Recommended Building Performance Metrics

System Type	Sub-system	Metric	Units
Whole Building	NA	Energy Use	**kWh/ m^2-yr**
Whole Building	NA	Energy Use	**kWh / yr**
Whole Building	NA	Energy Use	**kWh / m^2**
Whole Building	NA	Energy Use	**kWh / annual operating hours-cm2-yr**
Whole Building	Electric	Energy Use	**kWh / m^2-yr**
Whole Building	Electric	Energy Use	**kWh / m^2**
Whole Building	Gas	Energy Use	**kWh / m^2-yr**
Whole Building	Gas	Natural Gas Heat Rate	**kWh / hr**
Whole Building	Electric	Utility Cost	**€/ m^2-yr**
Whole Building	Gas	Utility Cost	**€/ m^2**
Whole Building	NA	Total Utility Cost	**€/ m^2**
Whole Building	NA	Energy Use Cost (excluding demand)	**€/ m^2**
Whole Building	Electric	Electric Demand - Peak	**kW / m^2-month**
Whole Building	Electric	Electric Demand - Peak	**kW m^2**
Whole Building	Electric	Electric Demand Cost	**€/ m^2-month**
Whole Building	Electric	Net facility load factor	**kW(avg) / kW(peak)**
Whole Building	Electric	Load Factor	**kWh / kW**
Whole Building	NA	Atmospheric emissions	**kg / m^2-yr**
Whole Building	NA	Atmospheric emissions	**€/ m^2-yr**
Whole Building	NA	Energy effectiveness	**Idealized kWh / Actual kWh*100**
Whole Building	NA	Building purchased energy cost intensity	**Currency / m^2-yr**
HVAC	Heating	Energy Use	**kWh / m^2-yr**
HVAC	Heating	Energy Use Cost	**€/ m^2-yr**
HVAC	Heating	Electric Demand - Peak	**kW / m^2-month**
HVAC	Heating	Electric Demand Cost - Peak	**€/ m^2-month**
HVAC	Heating	Total boiler output	**kWh / hr**
HVAC	Heating	Boiler efficiency	**kWh(out) / kWh(in)**

HVAC	Heating	Heating Plant Efficiency	**[kWh / h(out)] / [kWh / h(in)]**
HVAC	Cooling	Energy Use	**kWh / m^2-yr**
HVAC	Cooling	Energy Use Cost	**€/ m^2-yr**
HVAC	Cooling	Electric Demand - Peak	**kW / m^2-month**
HVAC	Cooling	Electric Demand - Peak	**kWh / hr-m^2**
HVAC	Cooling	Electric Demand - Peak kg	**kg / m^2**
HVAC	Cooling	Electric Demand Cost - Peak	**€/ m^2-month**
HVAC	Cooling	Electric Demand Cost - Peak	**€/ m^2-month**
HVAC	Cooling	Electric Demand efficiency	**kW / kg**
HVAC	Cooling	Chiller efficiency	**kW / kg**
HVAC	Cooling	Cooling Plant Efficiency	**kW / kg**
HVAC	Ventilation	Energy Use Cost	**€/ m^2-yr**
HVAC	Ventilation	Energy Use	**kWh / m^2-yr**
HVAC	Ventilation	Electric Demand - Peak	**kW / m^3/s**
HVAC	Ventilation	Outside air damper fraction	**% actual / % expected**
HVAC	Ventilation	Outside air ventilation	**OA m^3/min / person**
HVAC	Ventilation	Air handler specific power	**kW / m^3/min**
HVAC	Ventilation	Total air handler specific power	**kW / m^3/min**
HVAC	Ventilation	Average daily total air handler system specific power	**kW / m^3/min**
HVAC	Fans and pumps	Energy Use	**kWh / m2-yr**
HVAC	Fans and pumps	Energy Use	**kWh / yr**
HVAC	Heat HVAC + common aux	Energy Use	**kWh / m^2-yr**
HVAC	Cool HVAC + common aux	Energy Use	**kWh / m^2-yr**
HVAC	HVAC + common aux	Energy Use	**kWh / m2-yr**
HVAC	HVAC + common aux	Energy Use	**kWh / yr**
Lighting	NA	Energy Use	**kWh / m^2-yr**
Lighting	NA	Energy Use	**kWh / yr**
Lighting	NA	Energy Use	**kWh / m^2-yr**
Lighting	NA	Energy Use Cost	**€/ m^2-yr**

Lighting	NA	Electric Demand - Peak	**kW /m^2-month**
Lighting	NA	Electric Demand - Peak	**W / m^2**
Lighting	Exterior	Energy Use	**kWh / m^2-yr**
Lighting	Interior	Energy Use	**kWh / m^2-yr**
Lighting	Interior - Daylight Zones	Energy Use	**kWh / m^2-yr**
Lighting	Interior - Non-Daylight Zones	Energy Use	**kWh / yr**
Lighting	Interior	Electric Light Reduction Ratio	**[kWhdaylight area / yr-m^2] / [kWhnon-daylight area / yr-m^2]**
Whole Building	Plug Loads	Energy Use	**kWh / m^2-yr**
Whole Building	Plug Loads	Energy Use	**kWh / m^2-yr**
Whole Building	Plug Loads	Energy Use Cost	**€/ m^2-yr**
Whole Building	Plug Loads	Electric Demand - Peak	**kW /m^2**
Whole Building	People Movers	Energy Use	**kWh / m^2-yr**
Whole Building	People Movers	Energy Use	**kWh / yr**
Whole Building	People Movers	Energy Use Cost	**€/ m^2-yr**
Whole Building	People Movers	Electric Demand - Peak	**kW / m2**
Whole Building	Domestic Hot Water	Energy Use	**kWh / m^2-yr**
Whole Building	Domestic Hot Water	Energy Use	**kWh / yr**
Whole Building	Domestic Hot Water	Energy Use Cost	**€/ m^2-yr**
Whole Building	Domestic Hot Water	Electric Demand - Peak	**kW / m^2**
Whole Building	Process Loads	Process Loads Energy Use	**kWh /m^2-yr**
Whole Building	Process Loads	Process Loads Energy Use	**kWh/ yr**
Whole Building	Process Loads	Process Loads Energy Use Cost	**€/ m^2-yr**
Whole Building	Process Loads	Electric Demand - Peak	**kW / m^2**
Whole Building	Miscellaneous Equipment	Misc. Eqpt. Energy Use	**kWh / m^2-yr**
Whole Building	Miscellaneous Equipment	Misc. Eqpt. Energy Use	**kWh / yr**
Whole Building	Miscellaneous Equipment	Misc. Eqpt. Energy Use Cost	**€/ m^2-yr**
Whole Building	Miscellaneous Equipment	Electric Demand - Peak	**kW / m^2**
Whole Building	Comfort	% Hours uncomfortable	**% hours outside of space temperature range**

Whole Building	Comfort	Comfort Metric	**Average comfort index (0-100)**
Whole Building	Comfort	Comfort	**# sick absences / occupant-yr-cm2**
Whole Building	NA	Maintenance	**€spent on maint / yr**
Whole Building	NA	Maintenance	**hrs spent on maint / yr**
Whole Building	NA	Maintenance	**# maint requests (by type) / yr**
Whole Building	Domestic Water	Consumption	**m^3 / m^2-yr**

4.3. Recommendations for Measuring and Reporting Overall Data Center Efficiency

This paragraph provides recommendations for measuring and publishing overall data center infrastructure energy efficiency, based on guiding principles. It does not address IT efficiency because out of the scope of this project. It also does not directly address system-level metrics for cooling or heat rejection, air flow management, power distribution, lighting, etc.[1]

As long as many data center operators may not currently have the capability to measure all energy consuming components within their data center accurately. Four (4) categories of measurement, which represent a subset of The Green Grid's (TGG) measurement methods[2] are recommended. These categories range from relatively simple measurements that provide a performance snapshot to more sophisticated measurement means that provide highly detailed performance data.

The following guiding principles have been defined for the recommended measuring and reporting:

- Power Usage Effectiveness (PUE) using source energy consumption is the preferred energy efficiency metric for data centers. PUE is a measurement of the total energy of the data center divided by the IT energy consumption.
- When calculating PUE, IT energy consumption should, at a minimum, be measured at the output of the uninterruptible power supply (UPS). However, the industry should progressively improve measurement capabilities over time so that measurement of IT Energy consumption directly at the IT load (e.g., servers, storage, network, etc.) becomes the common practice.
- For a Dedicated Data Center, the total energy in the PUE equation will include all energy sources at the point of utility handoff to the data center owner or operator. For a Mixed- Use Data Center, the total energy will be all energy required to operate the data center, similar to a Dedicated Data Center, and

[1] The main reference of this paragraph is "Recommendations for Measuring and Reporting Overall Data Center Efficiency", also reported in References Chapter.

[2] The Green Grid nomenclature and supporting information: http://www.thegreengrid.org/en/Global/Content/whitepapers/Usage%20and%20Public%20Reporting%20Guidelines%20for%20PUE%20DCiE

should include cooling, lighting, and support infrastructure for the data center operations.

4.3.1. Definitions

Ancillary Services: This term refers to services that may be part of any data center. While they do not directly provide infrastructure or power, they are typical building services that will be present within the data center boundary and should be included in the total energy. Ancillary services include bathrooms, lobbies, kitchenettes, offices, conference rooms.

Data Center in Mixed-Use Building (Mixed-Use Data Center): This refers to a data center that is located within a larger building that may support other functions. For example, a data center located on a single floor within a larger office building. In this case the larger building contains some combination of non-IT operations, such as general administrative office space. A Mixed-Use Data Center may have its own dedicated infrastructure (UPS and cooling) or may have shared infrastructure. The Mixed-Use Data Center recommendations covered herein apply to data centers that have dedicated infrastructure (power and cooling).

Dedicated Data Center: A Dedicated Data Center is a free standing area/building in which all the spaces and supporting infrastructure (HVAC, lighting, electrical) are directly associated with the operation of the data center. Dedicated Data Centers are standalone areas/buildings whose exclusive purpose is IT operations and their support functions.

IT annual energy is calculated as annual electrical consumption of the IT. IT includes all IT equipment, servers, networking and storage as well as telecom equipment typically installed in telecom data centers.

Peak IT electric demand (kW) is the annual peak electric demand for the IT load.

Peak Total electric demand (kW) is the annual peak electric demand for the entire data center including IT and supporting infrastructure measured at the data center boundary (e.g. point of electric feed for Mixed-Use Data Centers or utility meters for Dedicated Data Centers).

PDU Output is defined as the output of the PDU (power distribution unit) that serves IT loads. PDU output does not include efficiency losses of any transformation that occurs within the PDU but may include downstream non-IT ancillary devices installed in IT racks such as fans. If there is non-IT equipment supported by the PDU system, (e.g., CRAC, CRAH, In-row coolers, etc.) it must be metered and subtracted from the PDU Output reading (the

metering approach should be consistent with the metering required for the PUE category e.g. continuous consumption metering for PUE categories 1,2 and 3).

IT equipment input is defined as the IT load as measured at the point of connection of the IT device to the electrical power system, e.g., the power receptacle(s). IT equipment input captures the actual power load of the IT device exclusive of any power distribution losses and non-IT loads such as rack mounted fans.

Supporting infrastructure includes the following systems:

- Power systems: Transfer switch, UPS, DC batteries/rectifiers (non UPS – Telco nodes), generator, transformer (step down), power distribution unit (PDU), rack distribution unit (RDU), breaker panels, distribution wiring, lighting.
- HVAC systems: Systems, equipment and control strategies including cooling towers, condenser water pumps, chillers, chilled water pumps, computer room air conditioners (CRAC's), computer room air handlers (CRAH's), dry cooler, supply fans, return fans, direct and indirect air economizer, direct and indirect evaporative cooling, water-side economizer, humidifier, in-row, in-rack, & in-chassis cooling solutions.
- Physical security: Fire suppression, water detection, physical security servers/devices.
- Building management systems: computer-based control system that control and monitor the building's mechanical and electrical equipment such as ventilation, lighting, power systems, fire systems, and security systems.

Total annual energy is calculated as the weighted sum of the annual energy consumption for all energy types serving the data center at the data center boundary. In a Dedicated Data Center building, this will include all energy captured on utility bills; for a Mixed-Use Data Center, all the same fuels must be sub-metered if they cross into the data center boundary. This includes electricity, natural gas, fuel oil, and district utilities such as supplied chilled water or condenser water. All energy types must be converted into the same units before they are summed. Total annual energy must include supporting infrastructure and dedicated ancillary services.

UPS Output is defined as the output of the UPS that serves IT equipment loads. UPS output does not include efficiency losses from the UPS system but does include losses from downstream electrical distribution components such as PDU's. It may include non-IT ancillary devices installed in IT racks such as fans. If there is non-IT equipment supported by the UPS system, (e.g.: CRAC, CRAH, In-row coolers, etc.) it must be metered and subtracted from the UPS Output reading (the metering approach should be consistent with the metering

required for the PUE category e.g. continuous consumption metering for PUE categories 1,2 and 3).

4.3.2. PUE Metric Calculation

Power Usage Effectiveness (PUE) is the recommended metric for characterizing and reporting overall data center infrastructure efficiency. Annual energy consumption (kWh) is recommended for all energy types as the measuring unit for PUE calculation. However, an entry level measurement category has been included in the recommendations to allow operators that do not have consumption measurement capability to utilize demand based power readings.

PUE is defined by the following formula:

PUE = Total data center energy consumption or power / IT energy consumption or power

The following sections detail boundary considerations for both Dedicated Data Centers and Mixed-Use Data Centers, describe the four recommended PUE categories for data centers, and address calculation details associated with proper accounting of all fuels and on-site systems.

(1) Data Center Boundaries

The PUE calculation guidelines presented address two data center configurations:

- Dedicated Data Center i.e. the data center is a free-standing building.
- Mixed-Use Data Center with dedicated infrastructure (i.e. the data center is within a larger building that has other uses, however the data center has dedicated HVAC and electrical systems).

The PUE calculation approach presented below is the same for both these configurations. However, there are some minor differences in how the boundary for total energy use is defined for each configuration, as shown in Figure 4:

- In Dedicated Data Centers, the boundary is the building boundary, i.e. all energy uses within in the building are included.
- In Mixed-Use Data Centers, shared ancillary services such as common lobbies, common bathrooms and elevators may be excluded from the energy use boundary. However, ancillary services that are dedicated to the data center must be included (e.g. lobby, bathrooms, office spaces that are dedicated to the data center operation).

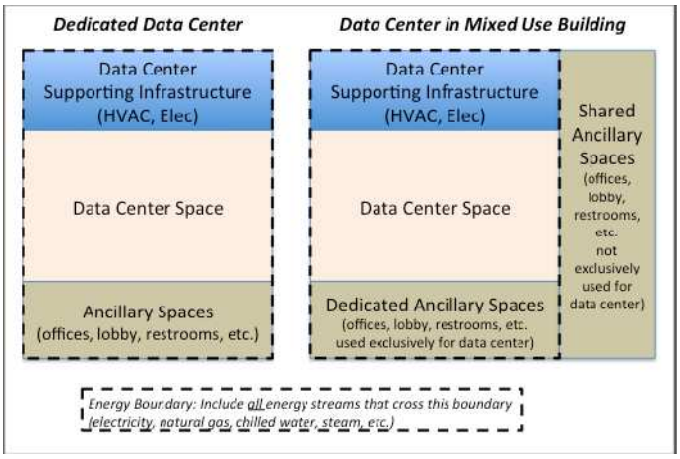

Figure 4 Energy use boundaries for Dedicated Data Centers and Mixed-Use Data Centers

(2) PUE Categories

There are four (4) measurement categories for the measurement of PUE within a data center:

PUE Category 0

This is a demand based calculation representing the peak load during a 12-month measurement period. IT power is represented by the demand (kW) reading of the UPS system output (or sum of outputs if more than one UPS system is installed) as measured during peak IT equipment utilization. Total data center power is measured at the data center boundary (e.g. point of electric feed for Mixed-Use Data Centers or utility meters for Dedicated Data Centers) and is typically reported as demand kW. As this is a snapshot measurement, the true impact of fluctuating IT or mechanical loads can be missed. However, consistent measurement can still provide valuable data that can assist in managing energy efficiency. PUE category 0 may only be used for all electric data centers i.e. it cannot be used for data centers that also use other types of energy (e.g. natural gas, district chilled water, etc.).

PUE Category 1

This is a consumption based calculation. The IT load is represented by a 12-month total kWh reading of the UPS system output (or sum of outputs if more than one UPS system is installed). This is a cumulative measurement and requires the use of kWh consumption meters at all measurement points. The total energy must include all fuel types that enter the data center boundary (electricity, natural gas, chilled water, etc.). In a Dedicated Data Center building, this will include all energy captured on utility bills; for a Mixed-Use Data Center, all the same fuels must be sub-metered if they cross into the data center boundary. Annual reading should reflect 12 consecutive months of energy data. This measurement method

captures the impact of fluctuating IT and cooling loads and therefore provides a more accurate overall performance picture than PUE Category 0.

PUE Category 2

This is a consumption based calculation. The IT load is represented by a 12-month total kWh reading taken at the output of the PDU's supporting IT loads (or sum of outputs if more than one PDU is installed). This is a cumulative measurement and requires the use of kWh consumption meters at all measurement points. The total energy is determined in the same way as Category 1. This measurement method provides additional accuracy of the IT load reading by removing the impact of losses associated with PDU transformers and static switches.

PUE Category 3

This is a consumption based calculation. The IT load is represented by a 12 month total kWh reading taken at the point of connection of the IT devices to the electrical system. This is a cumulative measurement and requires the use of kWh consumption meters at all measurement points. The total energy is determined in the same way as Category 1. This measurement method provides the highest level of accuracy for measurement of the IT load reading by removing all impact of losses associated with electrical distribution components and non-IT related devices, e.g., rack mounted fans, etc. Table 14 summarizes the four categories.

Table 14. PUE measurement categories recommended by this task force.

	PUE Category 0*	PUE Category 1	PUE Category 2	PUE Category 3
IT energy measurement location	UPS output	UPS output	PDU output	IT equipment input
Definition of IT energy	Peak IT electric demand	IT annual energy	IT annual energy	IT annual energy
Definition of Total energy	Peak Total electric demand	Total annual energy	Total annual energy	Total annual energy

*For PUE Category 0 the measurements are electric demand (kW).

(3) Weighing of Energy Types Based on Source Energy

For data centers that have electricity as well as other energy types, the different energy types must be weighed according to their source energy. Source energy (also called primary energy) represents the total amount of raw fuel that is required to operate the building. It incorporates all transmission, delivery, and production losses, thereby enabling a complete assessment of energy efficiency in a building.

Table 15 provides the weighing factors for each energy type, normalized to electricity. These weighing factors are based on national average source factors used by EPA in their building energy benchmarking. Weighed energy for each energy type = (Annual energy use X source energy weighing factor. Note that all energy types must be converted into the same units before they are summed. For example, if electricity is in kWh and natural gas is in kBtu, both must be converted to a common unit.

Table 15. Source energy weighing factors

Energy Type	Weighing Factor
Electricity	1.0
Natural gas	0.31
Fuel oil	0.30
Other fuels	0.30
District chilled water	0.31
District hot water	0.40
District steam	0.43
Condenser water	0.03

(4) Renewable Energy Sources

Electricity from renewable energy (RE) sources should be included in the total energy or power and assigned the same source factor as grid electricity. In other words, RE sources are outside the PUE calculation boundary (Figure 5). Therefore, the installation of RE sources does not change the PUE (i.e. an all-grid building and all-RE building would have the same PUE). The rationale for this is that the purpose of the PUE is to evaluate how efficiently energy is used in the data center, regardless of the energy supply. Renewable energy in this context includes solar and wind power.

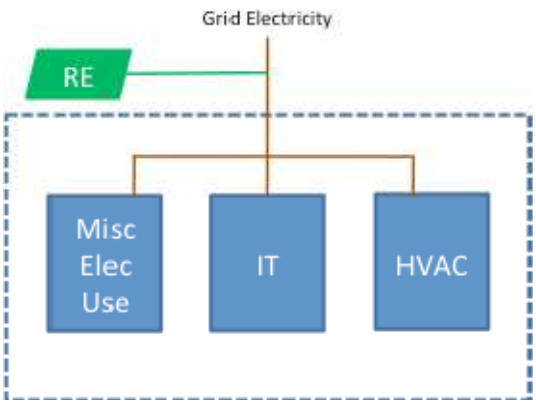

Figure 5 Data center PUE calculation boundary with renewable energy

(5) Combined Heat and Power Plants

If the data center has a dedicated combined heat and power (CHP) plant, the inputs to the CHP should be included in the total energy or power (Figure 6) and assigned the same source factors as those shown in Figure 7. The outputs from the CHP should not be included in the total energy or power. The use of CHP (like the one of more efficient cooling or other equipment) should lower the PUE. The rationale for this is that CHP is considered to be an efficiency measure rather than an alternative source of energy

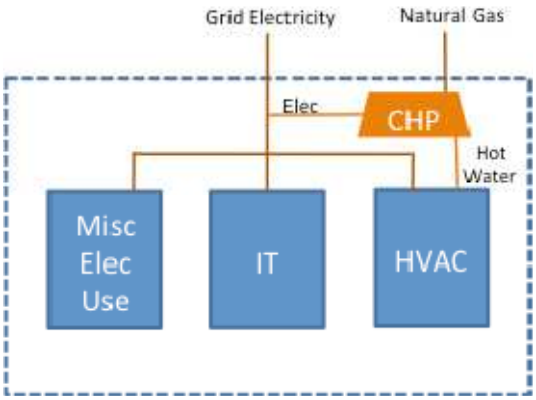

Figure 6 Data center PUE calculation boundary with CHP.

To enable equitable PUE calculations in data center designs that operate on-site electric generation two topics need to be explained:

IT Source Energy Conversion Factor

- To ensure the PUE calculations for a design including on-site electric generation and a design excluding on-site electric generation are equitable, an IT Source Energy Factor is used (Figure 7). The IT Source Energy Factor enables the data center owner / operator to include the efficiencies of generating chilled water (as in all calculations for PUE) but exclude the efficiencies of generating electricity (as in all calculations for PUE). PUE is not a metric to reward or penalize the efficiencies of how electricity is brought to the data center; it is a metric to identify how efficient the electricity is used from the data center boundary to the IT Equipment.

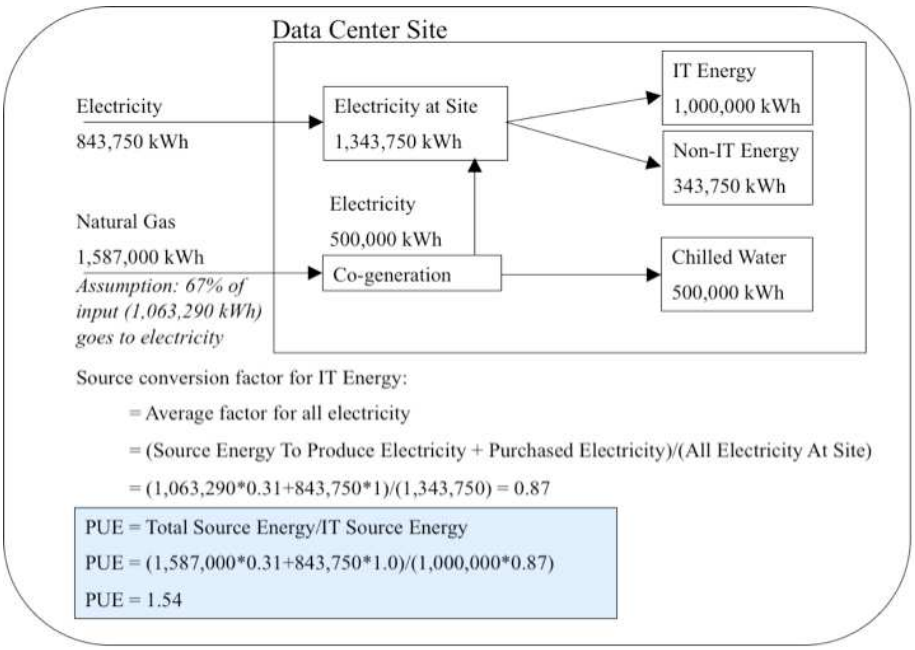

Figure 7 Data center with electric and natural gas (Co-generation) purchase

Cogeneration Input Fuel Assumptions:

- It has been adopted the assumption that 67% of a cogeneration plants' input fuel is allocated to the primary form of generation (electricity in the provided example) and respectively 33% of the primary input fuel is allocated to the secondary form of generation (chilled water in the provided example).
- This assumption is based on a similar steam based cogeneration study from the U.S. Environmental Protection Agency's Energy Star Program. Differences do exist between the two scenarios but to solidify the methodology of calculating PUE and to drive consistent and equitable calculations for all design types, the work has proceeded with the recommendation to adopt this approach.

(6) Reused Data Center Energy

The concept of reusing waste energy (generally in the form of heat) is receiving a lot of study as part of an overall effort to improve energy efficiency. The value of this energy may or may not affect PUE, depending on the location of the re-use.

- If the energy is reused within the datacenter, the value of the reused energy will already be contained within the PUE calculation and needs no special consideration. An example will be reusing waste heat to warm a battery space in a cool climate. The PUE would generally be lower because the HVAC system does not have to add as much energy to heat that battery space, thereby reducing the PUE when energy is measured and PUE calculated.

- If the energy is reused outside the data center (e.g. re-using heat to warm a lab that is not part of the data center), the PUE of the data center will be not affected. While the effort to conserve energy is laudable, it cannot be accounted for in the calculation of the data center PUE due to the strict definition of PUE used in these recommendations. Currently there are on-going industry efforts to define a metric that could be used to account for this beneficial use but it is specifically excluded from PUE.

5. ICT PSP Methodology and benchmarking approach

The first part of this chapter introduces the ICT PSP projects common methodology to calculate energy savings. The eeMeasure project is in charge of developing a generic residential and non-residential Measurement and Verification methodology appropriate for ICT-PSP projects, and an on-line software service to calculate, display and analyze project results.

The second part of the chapter is particularly dedicated to healthcare facilities and describes how to create a benchmarking model for hospitals.

5.1. Methodology for energy efficiency measurements applicable to ICT in building

This paragraph resumes some key concepts from the eeMeasure project document D1.2 Non residential Methodology. The respect of the methodology developed by the eeMeasure project is very important to make the results of the different ICT PSP projects comparable.

The diagram presented in Figure 8 shows the high level process flow created by the eeMeasure project to be used by ICT PSP projects. The first five steps are those normally taken by a project to report results. The final two steps help policy makers and project managers to determine potential Energy Savings in other buildings.

The experimental design affects the statistical relevance of results and should be evaluated carefully. Then the correct energy saving calculation type has to be chosen considering the type of energy saving intervention, the seasonal variation of energy consumption and the effect of other predictor variables.

For this reason both energy data and predictor variables values should be metered and collected. In other cases the use of control groups can nullify the effect of predictor variables. Data frequency and metering granularity are key aspects to be evaluated. Corrupted data should be eliminated using a proper data validation procedure.

The software developed by the eeMeasure project helps to build the Unit Demand Model which can be used to compare data collected during the baseline period (before the intervention) and data collected during the test period (after the intervention).

The comparison between data collected before and after the intervention, normalized through the model, allows evaluating energy savings. Data analysis should be performed to classify results in three different categories of reliability.

Finally the model built can be used to predict savings caused by the same intervention in other buildings with different static factors (e.g. socioeconomic group, building age, occupant age, floor area, location).

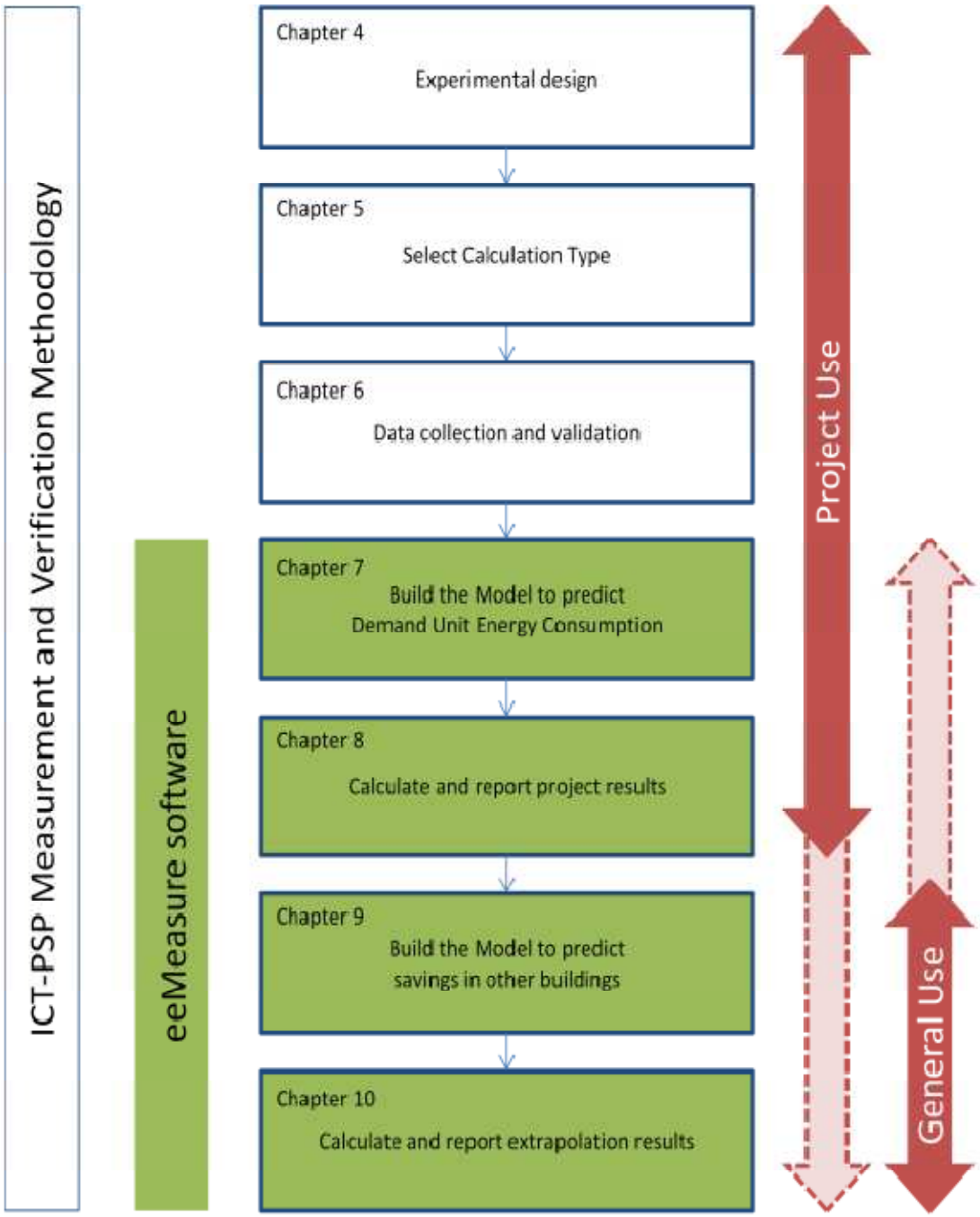

Figure 8 Process flow to be used by ICT PSP projects (eeMeasure project)

5.2. Benchmarking: Healthcare Facilities

Benchmarking is an assessment approach in which energy-related metrics measured or estimated at one facility are compared to those from other facilities and/or specific performance targets. Benchmarks can be derived from distributions of metric values obtained from facilities having similar functionality or characteristics, from engineering analysis or building simulation modelling, or from expert knowledge of standard and best practices. Energy benchmarking allows building owners, managers, and facilities engineers and managers to view how their energy use compares to that of their "peer buildings" (buildings similar in size, function, or another service metric). Based on the performance of an individual building relative to the benchmark, facilities managers can identify potential best practices at their facility (e.g., where they perform better than the benchmark) as well as areas for improvement (e.g., where they perform worse than the benchmark).

5.2.1. Benchmarking Indicators

Two indicators are most commonly used internationally for benchmarking in hospitals and they are (Leonardo Energy, 2008):

a) Annual energy consumption per square meter of the hospital building area

b) Annual energy consumption per inpatient bed in the hospital

It is important to bear in mind that these indicators are based on technical characteristics of the building. If sufficient data are generated and compiled then it is desirable to compare hospitals on the basis of energy consumption both per bed and per square meter. One difficulty that stands in the way of benchmarking is the degree of outsourcing in the hospital. For instance, some hospitals contract out their catering and laundry activities which lead to a lower energy consumption by the hospital itself and thus have lower energy baseline and benchmarks.

Both indicators have their own particular disadvantages:

- When taking the built-up area into consideration, the hospital management needs to decide which areas of the hospital building are included in the benchmark or not (e.g. outdoor gardening, car parks, roads, corridors and equipment floors). Secondly how much of the hospital's built-up or the carpet area is air conditioned or non-conditioned in real situation.
- When taking beds into consideration, hospitals built-up or carpet area per bed is the critical factor. This factor is determined by the type of hospital and by the design criteria of its construction. One needs to take into account, the trend towards higher quality of health care and greater privacy for patients, which may lead to a lower number of beds per room and thus a greater number of square meters per bed. Secondly, many hospitals have combined

metering of energy consumption of out-patient department and in-patient department. Therefore for an effective benchmarking, independent sub-metering of the two may be essential.

Another method of benchmarking is the one normally used in process industries, namely benchmarking on the basis of "production" by the hospital. The parameters used for “production” in hospitals could be the number of patient overnights or the number of bed-days actually used annually. From this, one can determine the energy consumption per overnight. However, this depends on a large degree on the type of hospital, and on trends in healthcare facilities. For instance, the number of overnights per treatment has sharply fallen in recent years, because the number of treatments has considerably risen for the same number of beds. There is also a possibility that with increasing load of inpatients and scarcity of room space in the hospitals, lesser area per patient is provided. Climate conditions also greatly affect energy consumption in hospitals, and thus climate based benchmarks could be more meaningful or alternatively they need to be sufficiently normalized for an effective comparison.

5.2.2. Benchmarking Approaches

In practice, two following approaches for benchmarking are adopted.

- Internal Benchmarking; where energy performance of a building is compared against its own previous performance over a period of time. This approach is typically used to compare performance before and after retrofit measures have been implemented for energy savings.
- External Benchmarking; involves comparison of energy performance of similar buildings against an established standard or baseline. This is typically used to set performance targets for the future.

The Benchmarking offers the following advantages:

- It assists in initiating an in-house energy saving program or a macro level energy efficiency program.
- It determines how a building’s energy use compares with others; this immediately helps the management in identifying savings potential.
- It facilitates the management to set targets for improved performance and monitoring them on a continuing basis.
- It facilitates the building owners gaining recognition for exemplary achievement in energy performance

- It assists the Service Providers to communicate energy performance of buildings in terms of “typical” vs. “best practice” benchmark
- It helps utility companies to compile energy data from various buildings and track energy use and its growth trends.

Looking at the advantages and disadvantages into consideration, it is useful for the hospital management to analyse the above-mentioned indicators for establishing the energy benchmarks in the hospitals.

5.2.3. Energy performance benchmarking tools for healthcare facilities

(1) Energy benchmarking system for hospitals by ENERGY STAR

The U.S. Environmental Protection Agency and Department of Energy through the ENERGY STAR® Program have developed an energy performance benchmarking tool. The tool enables building owners to evaluate the energy performance of their buildings (including hospitals, hotels offices, medical offices etc.) on a scale of 1-100 relative to similar buildings nationwide. The rating system accounts for the impacts of year-to-year weather variations, as well as building size, location, and several operating characteristics. Buildings rating of 75 or greater qualify for the ENERGY STAR label.

ELIGIBILITY CRITERIA

- Gross square area of 20,000 or greater
- Occupied for at least 11 of the last 12 months
- More than 50 percent of gross floor area must be used for general medical and surgical services
- More than 50 percent of licensed beds must provide short term acute care services.
- No more than 10 percent of floor area designated as data center space.

Medical office and/or senior care buildings on a hospital campus should be included as part of the hospital campus square footage. But if they are separately metered, and meet all the eligibility requirements, medical office and senior care buildings can receive separate ENERGY STAR scores.

DATA NEEDED

- Building or campus address including zip code
- Year built

- Gross square footage
- Number of beds set up and staffed for use
- Number of full-time equivalent workers
- Number of Magnetic Resonance Imaging (MRI) Equipment
- At least 12 consecutive months of overlapping energy use and cost for all fuel types
- Data Center floor area and energy use (see Data Center Quick Reference Guide)

Optional: Number of buildings on campus, floors in the tallest building on campus, ownership status (Non-profit/For profit/Governmental), and the presence or absence of a laboratory, tertiary care services, and on-site laundry facility.

ENERGY STAR scores are generated on a 1–100 scale, where each point corresponds to 1% of the national building population. Higher scoring hospitals are better energy performers than lower scoring ones. An ENERGY STAR score of seventy (70) indicates the hospital is more energy efficient than 70% of its peers nationally. A score of fifty (50) is defined as the industry mean, where 50% of the population performs better and 50% performs worse. Use the guidance below to determine the next steps.

1–49 greatest opportunity for improvement. Investments in new equipment, combined with aggressive low-cost operations and maintenance practices, could have the greatest impact on your bottom line.

50–74 significant opportunity to reap savings. Simple, low-cost operations and maintenance practices, combined with equipment upgrades, could yield significant savings.

75–100 Opportunity to gain recognition and demonstrate best practices. Continue to improve and maintain superior performance by focusing on operations and maintenance.

(2) Energy benchmarking system for hospitals by LBNL

The research team at LBNL (Lawrence Berkeley National Laboratory) developed an energy benchmarking system for hospitals to provide information to better understand hospitals' energy performance and identify energy savings opportunities. While many benchmarks begin with information available from utility bills, the LBNL benchmark works with more resolved energy use data. Singer (2009) presents Version 1.0 of the Hospital Energy Benchmark.

Benchmarking is an assessment approach in which energy-related metrics measured or estimated at one facility are compared to those from other facilities and/or specific performance targets. Metrics can be specified at the level of a facility, a building, a functional area within a building or specific systems or operations. Benchmarks can be

derived from distributions of metric values obtained from facilities having similar functionality or characteristics, from engineering analysis or building simulation modelling, or from expert knowledge of standard and best practices. Metrics should be developed to make comparisons among facilities as relevant and meaningful as possible. This is accomplished by limiting the comparison group (e.g., inpatient facilities that provide acute care services) or by use of metrics that are normalized or otherwise adjusted by essentially uncontrollable determinants of energy use. Other factors that have a first order effect on energy are climate, weather, operating schedule, and the suite of activities occurring within the facility. Accounting for these factors is discussed below.

The common starting point for facility benchmarking is energy use information from utility and fuel bills. These provide the cost and amount of each type of energy (electricity, natural gas, fuel oil, etc.) used at the site on a monthly basis. The next step is to identify the buildings served by each supply of energy, as described in more detail below. Assuming for the moment the simplest case of a hospital building with a dedicated central plant, the supplied energy (from utility bills) can be divided by floor area to calculate site energy intensities for electricity (kWh/m2-yr), all fuels including natural gas and oil (kBtu/m2-yr), and all forms of energy used on site (kBtu/m2-yr, obtained by converting electric energy into kBtu).

Energy use intensity should also be framed in terms of source energy. Source energy recognizes variations in the amount of primary fuel energy required to deliver various forms of energy at the site. The key distinction is between electricity and primary fuels such as natural gas and fuel oils. For every unit of electrical energy used on site, roughly three units of primary fuel energy (from coal or natural gas) are required to generate and deliver that electrical energy to the site. Source energy is calculated by applying national, regional, or site-specific multipliers to each form of energy used on site. Regions relying more on hydroelectric, nuclear, and renewable generation have lower site-to-source electricity multipliers. The on-site use of primary fuels can have a small energy multiplier for delivery and upstream (extraction and production) energy requirements. District steam has an additional multiplier associated with distribution losses. Energy costs are reflected more closely by source rather than site energy as electricity pricing includes the cost of primary fuels used in production. Likewise, carbon emissions are better reflected by source than site energy. A more detailed description of site to source energy conversion is provided in the documentation for the Energy Star facility-level benchmarking system2. The Energy Star algorithm uses the following national factors to convert from site to source energy: 3.34 for electricity, 1.05 for natural gas, 1.01 for fuel oil, 1.01 for diesel fuel, 1.45 for district steam, 1.35 for district hot water, and 1.05 for district chilled water.

While facility or building-level energy intensity provides a valuable overall metric, the targeting of specific areas for improvement is better served by finer resolution. Hospital energy use can be resolved in various ways. Seasonal trends apparent from utility bills can indicate the importance of external drivers (e.g. cooling related to outdoor air temperature).

Time-of-use metering can provide information related to daily and weekly facility schedules. For multi-building campuses, energy use can and should be specifically resolved for the hospital building. Within the hospital, administrators may desire to resolve energy

(and costs) by medical department. This may or may not be feasible for some electrical loads (depending on system architecture), and is even more complicated for ventilation and thermal conditioning services.

This benchmarking system is designed to understand energy use through metrics associated with the following major building energy services and systems:

- Cooling (including space and equipment)
- Space heating
- Domestic hot water (DHW)
- Steam
- Ventilation (air movement)
- Lighting
- Miscellaneous equipment and plug loads (including distributed medical equipment and computers).

Additionally considered are the following services and spatial resolutions of specific relevance to hospitals:

- Large ("group 1") medical equipment.
- Patient room areas.
- Other large, resolvable loads (e.g. data centers, kitchens), as feasible.

System-level metrics support energy reduction in several ways. They facilitate identification of systems that are poorly performing in relation to those at other facilities. Information about system performance, components and operational patterns can help identify fundamentally inefficient equipment, inefficient modes of operation, and problems with equipment leading to inefficient operation. The resolution of total facility energy use into component systems can help prioritize efforts since small improvements to systems that use large amounts of energy may provide more savings than large improvements to systems that use little energy.

(3) Normalizing Factors

There are two groups of characteristics that impact facility energy use and are outside the control of facility staff. The first includes location (relevant as climate and weather establish thermal conditioning and lighting constraints); building characteristics such as height, type of construction, orientation, etc.; and basic heating and cooling system configurations. The second group pertains to medical services. Hospital energy use should scale with medical service provision and to a lesser extent capacity. Hospital capacity is primarily indicated by total floor area and the number of licensed beds. The presence and extent of operating rooms, critical care units, high-energy imaging equipment and other energy-intensive services are additional measures of capacity. The "product" of patient care can be tracked by various measures including licensed bed-days (inpatient days), admissions

(or discharges), and total patient (census) days. These factors overall drive energy use independent of efficiency, and should thus be considered in comparisons. Factors with simple and direct relations to energy use can be incorporated into the calculated metrics, as noted above for floor area. A second approach is to group facilities by the factors; this is typically done with climate zone. A third approach is to develop regression models that adjust metrics according to the independent characteristics. This is the approach used by EPA's Energy Star facility-level hospital benchmarking system3; the rating scale incorporates a multivariate regression model to adjust for both building and activity characteristics.

(4) Metric Categories & Rationale

This section describes rationale for the selected metric categories. Specific metrics are described in the following tables.

Thermal Energy and Ventilation Provided to Hospital

Services: Cooling, heating, domestic hot water, steam, ventilation.

Rationale: Independent of the efficiency with which the loads are being satisfied, these metrics can help identify unusually high service requirements. It is common for hospitals to have excess cooling in the ventilation air provided to some zones which in turn requires reheat of this air. In this situation, both the cooling and heating systems may be efficiently producing and distributing thermal services but the overall system would be wasting energy. Ventilation air supply that greatly exceeds code requirements also represents an opportunity for savings.

System Efficiencies

Services: Cooling, heating, domestic hot water, ventilation.

Rationale: Independent of the loads on the buildings, the systems used to meet these loads can operate with varying efficiency. The highest level metric is the overall system efficiency. The efficiencies of individual equipment components are important but even efficient components can be combined or utilized in a manner that leads to lower overall efficiency. Heating, domestic hot water (DHW) and steam are considered in varying combinations and configurations to reflect the often inter-connected systems used to produce these services.

Thermal and Ventilation End-Use Intensities (EUI)

Services: Cooling, heating, domestic hot water, ventilation.

Rationale: This provides information to provide hospitals with total energy use and thus prioritize efforts to reduce energy use and costs. Even small reductions in the most energy intensive systems may yield greater savings than large improvements in less important systems.

Electrical End-Use Metrics in Hospital

Services: Lighting, large medical equipment, distributed medical equipment & plug loads. Rationale: The objective is to identify and quantify major components of the total hospital electrical load. Little is known about the overall electrical load of medical equipment, both large centralized facilities and distributed equipment; this information will guide prioritization of this end use. Patient room areas serve similar functions in most hospitals and are thus suitable for comparison and benchmarking. Determination of end-use intensity and total electrical energy use in patient room areas will provide an estimate of use in diagnostic & treatment areas.

Table 16: Metrics for thermal and ventilation services provided to hospital.

THERMAL AND VENTILATION SERVICES PROVIDED TO HOSPITAL BUILDING		
Metric	Data required	Comments
Cooling to hospital: **- Annual kWh /m^2-yr**[1] **- Base Wh/m^2-day** **- Hourly kWh vs. outdoor temp.**	• Supply and return temperatures (ΔT), flow of chilled water to hospital, outdoor air temperature.	• Annual measure is ideal but infeasible in many facilities. Other metrics are proposed and require research validation. • Base cooling meets occupancy and process loads; measure during neutral weather conditions. Can be on daily basis. • Hourly data during peak cooling and neutral weather seasons may be used to extrapolate to annual estimate. • If district system, also calculate annual kg-h to multiply by system efficiency (kWh/kg-h) to get kWh/yr and kWh/m^2-yr.
Heating to hospital[2]**:** **- Annual kWh/m^2-yr** **- Base Wh/m2-wk** **- Hourly kWh vs. outdoor temp.**	• Supply and return temperatures (ΔT), flow of heating water to hospital or supply and return energy flows of steam.[2]	• Annual measured is ideal but infeasible in many facilities. Other metrics are proposed and require research validation. • Base measured during neutral weather. • Hourly data during peak heating, cooling and neutral weather seasons may be used to extrapolate to annual estimate. • Reheat may increase during peak cooling season.
Domestic hot water (DHW) to hospital: - kWh/m^2**-yr**	• Supply and return temperatures (ΔT), flow of hot water to hospital.	• Applicable to central systems only. • Weekly measure can be extrapolated to annual load. • May need to consider variable hospital occupancy / census.
Actual vs. required air flow by zone. - m^3**/s/m^3/s**	• Actual airflow by zone. • Code required airflow by zone.	• Airflow impacts energy use for ventilation, cooling and heating. • Screen to see if supply is greatly in excess of requirements.

1 Convert to kg-h/m2-yr to combine with system kW/kg (see Table 15) to calculate site kWh/m2-yr.

2 Note that equipment to measure steam energy flows is not generally in place or readily installed.

Table 17: Thermal and ventilation system efficiencies.

THERMAL AND VENTILATION SERVICES PROVIDED TO HOSPITAL BUILDING		
Metric	Data required	Comments
Cooling system overall efficiency: **- Site kW/kg**	• Power/energy to create, distribute cooling (chillers, pumps, etc.) • Cooling supplied by central plant, from chilled water supply and return temp (ΔT) and flow.	• Energy units are kWh/kg-h. • Can require a large number of power measurements. • Integrated performance, e.g. over 1 week of cooling season. • Analyse relative to cooling produced and/or wet bulb temp.
Heating & DHW system efficiencies: **- Source kWh /** kWh to **hospital**[1,2]	• Net fluid energy flows (supply- return) from central plant. • Fuel energy supplied to boilers. • Electricity for large pumps.	• Applicable to systems serving hospital only or other buildings. • Ignore small electrical loads. Monitor for one week or more. • This combined metric recognizes that central DHW systems are often connected to heating; resolve as feasible. • Steam systems may combine process steam, humidification, heating and DHW in various combinations; resolve to component systems as feasible or forego this metric.[3]
Boiler efficiencies: **- kWh out / kWh in**	• Net energy flows (supply-return) from central plant. • Fuel energy input to boiler.	• Integrated over operating week. • Consider steam and water boilers separately. • Benefit of DHW pre-heat captured in DHW efficiency metrics.
Ventilation efficiency: **- Base W/ m^3/s** - Peak W/ m^3**/s**	• Airflow (km^3/min), power (kW) for each fan and totally for each group of fans: supply, return, exhaust.	• Base saticm2ies air change requirements and removal of internally- generated heat; peak includes seasonal cooling. • Obtain flow from fan rating or past balance report. • Actual W for supply will vary with filter loading.

1 Source energy accounts for efficiency of electricity generation from primary fuel, losses in distribution system for all fuels, etc.; this is the best metric for comparing different forms of energy used on site.

2 Includes all substantial energy loads for generation (e.g. boiler fuel) and distribution (e.g. heating water pumps) of thermal service. This metric is combined with actual quantity of service provided to hospital (Table 1) to calculate energy use intensity (source kWh/m2-yr) for hospital building.

3 Note that the equipment to measure steam energy flows is not generally in place or readily installed.

Table 18: Metrics for hospital thermal and ventilation energy intensities.

HOSPITAL THERMAL AND VENTILATION ENERGY INTENSITIES		
Metric[1,2]	Data required	Comments
Cooling EUI: **- Site kWh/m^2-yr** **- Source kWh/m^2-yr** **- T-varying Wh/m^2-h** [3]	• Cooling system efficiency and cooling supplied to hospital, or • Total power of all cooling equipment (hospital only).	• Provide hospital with part of total facility (central plant) cooling energy; based on fraction of total cooling load to hospital. • Also track outdoor temperature. • Extrapolation techniques under development.
Heating EUI: **- Source kWh/m^2-yr** **- T-varying Wh/m^2-h** [3]	• Heating system efficiency and heating supplied to hospital, or • Total energy of all heating equipment (hospital only).	• If the system just serves hospitals, it will need only fuel energy to boilers and electricity to large pumps. • Also track outdoor temperature. • Extrapolation techniques under development.
DHW EUI: **- Source kWh/m^2-yr**	• DHW system efficiency. • DHW to hospital.	• If the system just serves hospitals, it will need only fuel energy to boilers and electricity to large pumps. Extrapolate from week to year.
Steam EUI: **- Source kWh/m^2-yr**	• Fuel energy to steam boilers.	• Applicable when the steam system only serves hospitals. • Assumes pump & boiler fan energy small relative to boiler fuel. • Measure 1 week or more, extrapolate to year.
Heating + Steam + DHW EUI: **- Source kWh/m^2-yr** **- T-varying Wh/m^2-h** [3]	• Refer to data requirements for individual services above.	• Broadest metric for combined systems can also calculate for pairs (e.g., Steam + DHW). • For any system serving hospitals only, it needs only fuel energy to boilers and electricity to large pumps.
Ventilation EUI: **- Site kWh/ m^2-yr** **- Source kWh/ m^2-yr**	• Total electric energy for all fans (supply, return, exhaust).	• Number of measurements may be large but acquisition should be straightforward.

1 Source energy accounts for efficiency of electricity generation from primary fuel, losses in distribution system for all fuels, etc.; this is the best metric for comparing different forms of energy used on site. Source energy provides meaningful approach to combine electrical (pumps) and other fuels (boilers) used in generation and distribution of heating, hot water, etc.

2 Metrics can alternately be normalized to # of patients served by hospital (e.g., patient days) per year.

3 See notes in Table 7 and "Special considerations" about hourly data to assess variability with weather and extrapolation.

Table 19: Electrical end use metrics.

ELECTRICAL **END USE METRICS**		
Metric[1,2]	Data required	Comments
Non-equipment electric EUI of hospital: - Site **kWh/m^2-yr**	• Total of Normal, Critical, & Life Safety branches for hospital. • Subtract power to large HVAC equipment on these branches	• Composite of lighting, medical equipment and plug loads; valid for comparisons among hospitals. • Costly to install temporary monitors on high voltage, high current distribution panels; likely limited to existing monitors.
Electrical EUI of patient room area: - Site **kWh/m^2-wk**	• Total of Normal & Critical branches for sample area. • Sample area floor space (m^2) and patient census or number of beds.	• Composite of lighting, medical equipment and plug loads. • Patient bed areas serve similar function across hospitals; relevant for comparisons & benchmarking. • Extrapolate to all patient bed areas of hospital
Non-equipment electrical EUI of D&T areas: - Site **kWh/m^2-wk**	• Total NL + CR for patient room areas (calculate from sample). • Total non-equipment electric energy to hospital (above).	• Composite of lighting, medical equipment and plug loads in diagnostic & treatment areas; valid for comparisons among hospitals.
Lighting power load of patient room area, - **<u>Installed</u> W/m2**	• Census of lighting in sample of patient bed area (installed W).	• Group for purpose of estimating overall energy use by combining schedule and installed capacity. • Independently useful metric for comparison.
Lighting EUI of patient room area: - Site **kWh/m^2-wk**	• Installed W/m^2 and schedule of operation for light sources, OR • Power supplied to lighting.	• Provides estimate of lighting energy and other plug loads when subtracted from total power in patient room area. • Monitor directly when lighting on discrete panels.
Illumination in patient room area: lux	• Illuminance at designated locations (TBD)	• Measure actual illuminance in patient rooms, hallways, etc. • Identify over-design of lighting
Medical equipment, plug loads of patient room areas: Site kWh/m^2-wk	• Subtract lighting EUI from total electrical EUI of patient room areas.	• Currently little is known about loads of medical equipment and other plug loads.
Energy intensity of large medical equipment: **- Site kWh/yr** **- Site kWh/unit activity**	• Power for each separable facility or large medical equipment. • Equipment-specific activity metric (patient, scan, etc.)	• Info needed on actual energy use of this equipment • Need to identify relevant activity measures, e.g. number of patients served by equipment.

1 Electrical energy metrics expressed as site kWh/time; convert to source energy when attributing total facility source energy use.

2 Many of the metrics can alternately be normalized to # of patients served by hospital (e.g., patient days) per year.

Table 20: Other metrics for energy efficiency evaluation (PARTIAL LIST)[1]

OTHER METRICS		
Metric[1],	Data required	Comments
Temperature set points	Temperature set points	Temperature set points
RH set points	RH set points	RH set points

1 This table is a placeholder for any other metrics or data that may inform opportunities for energy savings and efficiency gains.

(5) Implementation Protocol

Following the major steps for implementing the hospital energy benchmarking system are presented. This is intended to guide implementation by practitioners familiar with hospital mechanical and electrical systems and experienced in the installation of monitoring equipment.

1. Benchmark facility using EPA Energy Star Portfolio Manager.
2. Identify flows and boundaries of major energy-using systems
    a. Identify thermal energy flows (cooling, space heating, domestic hot water, steam)
    b. Review electrical system organization and special features
    c. Consider temporal and seasonal variance of energy-using systems
3. Identify target metrics and data
    a. Identify component data needed for each metric
    b. Determine data already being monitored
    c. Consider options for obtaining other data
        i. Install permanent monitors for direct measurement
        ii. Shorter term monitoring
        iii. Surrogate measures (time of use, etc.)
4. Develop monitoring and data collection plan
    a. Re(-set) trending of existing data streams
    b. Calibration of existing sensors
    c. Installation of new permanent sensors

   d. Sensors installed for temporary monitoring
   e. One-time measurements (e.g. fixed-speed pump or fan power)
   f. Data collection materials and implementation schedule
5. Implement monitoring plan; collect data
6. Obtain information on facility characteristics
   a. Total floor area of hospital and other buildings to be included in EUI calculations
   b. Patient census
   c. Floor space of patient room areas (sampled area and total)
7. Data processing and analysis
   a. Review monitoring results for quality assurance
   b. Construct consolidated database
   c. Calculate metrics with time-resolved data
   d. Calculate time-integrated metrics
   e. Data analysis
8. Compare metrics to benchmarks and assess opportunities to reduce energy consumption

(6) Types and Locations of Measurements

This section lists the types and locations of data to be monitored or otherwise obtained for the calculation of the energy performance metrics provided above. This list is intended to facilitate planning and assessment of monitoring equipment needs

- Electrical data points
  - Central plant equipment resolved by system (note: if possible to measure total electrical power to central plant, may be able to measure only subset of following and estimate the remainder by difference)
  - Equipment not related to cooling (may be able to get cooling by subtraction)
    - Primary heating water pumps
    - Secondary heating water pumps, if present
    - AHUs for cooling, heating rooms of central plant
    - Boiler fans

    - Condensate return pumps if in central plant (often distributed)
    - Steam boiler feed water pumps (varies)
  - Cooling equipment
    - Chillers
    - Primary chilled water pumps
    - Secondary chilled water pumps
    - Evaporator pumps
    - Cooling tower fans
  - Air handling units (AHU)
  - Critical and Normal for selected patient room areas (2 per sampled area)
  - Large medical equipment / facilities (1 per facility)
  - Large HVAC equipment on CR or NL (not EQ) branches (varies)

- Electrical distribution and feeds, as feasible from installed sub-meters
  - Main feed of each branch into hospital building
  - Central plant main feeds (MCC, equipment branch only, other)

- Water flow data points
  - Cooling water in/out of hospital building
  - Cooling water supply/return from central plant (if multiple buildings served)
  - Heating water in/out of hospital building
  - Heating water in/out of central plant (if multiple buildings served)
  - Domestic hot water into hospital building
  - Domestic hot water out of hospital building

- Water temperature data points
  - Cooling water in/out of hospital building
  - Cooling water supply/return from central plant (if multiple buildings served)
  - Hot water in/out of hospital building
  - Heating water in/out of central plant (if multiple buildings are served)
  - Domestic hot water into hospital building
  - Domestic hot water out of hospital building

- Other data points
  - Total plan natural gas and fuel oil use
  - Fuel use for each boiler (or firing rate and fun time)
  - Steam energy flows in/out of hospital building
  - Airflow for each AHU supply and return (many)
  - Airflow for each exhaust fan (many)

- Equipment characteristics
  - Cooling system type, rated efficiencies, operational patterns
  - Heating system type, rated efficiencies, operational patterns
  - Ventilation system type
    - Design and previously measured airflows
    - Operational patterns
  - Hot water system type, rated efficiency
  - Lighting equipment in selected patient room areas

- Facility characteristics
  - Configuration of heating and cooling systems: where/how generated, buildings served?
  - Total floor area of all buildings served by central cooling, heating systems
  - Total floor area of hospital building
  - Total floor area of patient room area
  - Total floor area of D&T areas
  - Floor areas sampled (for electrical use) in patient room areas
  - Patient census days (includes admission but not discharge day)
  - Admissions + Outpatient visits as metric of total D&T activity?

- Large Medical Equipment
  - List of equipment & electrical branches
  - Activity logs (e.g. number of patients, number of scans, etc.)

- Normalization and other factors
  - Total floor area of all buildings served by central cooling, heating systems
  - Total floor area of hospital building
  - Floor areas sampled (for electrical use) in patient room areas
  - Total floor area of patient room area
  - Total floor area of D&T areas
  - Patient census days (includes admission but not discharge day)
  - Admissions + Outpatient visits as metric of total D&T activity?

Table 21 provides the selected metrics for which draft benchmarks are needed.

Table 21. Hospital energy performance metrics requiring benchmarks.

Metric	Comments
THERMAL AND VENTILATION SERVICES PROVIDED TO HOSPITAL BUILDING	
Cooling to hospital **Annual kWh/m^2-yr** **Base Wh/m^2-day** **- Hourly kWh vs. outdoor temp.**	Base measured during neutral weather. Pending data collection and analysis.
Heating to hospital **- Same metrics as cooling**	Same as above.
Domestic hot water (DHW) to hospital (kWh/m^2-yr)	Pending data collection and analysis. Assume to be similar each week.
Ventilation supply airflow: **- Base m^3/s/m^2 - Peak m^3/min/m^2**	Base for occupant and process loads; peak for seasonal cooling increase with VAV systems. Pending data.
THERMAL AND VENTILATION SYSTEM EFFICIENCIES	
Heating & DHW system efficiencies: **- Source kWh/ kWh to hospital**	Pending data collection and analysis.
Heating water boiler efficiency: **- kWh out / kWh in**	Base on available equipment.
Steam boiler efficiency: **- kWh out / kWh in**	Base on available equipment.
ELECTRICAL END USE METRICS	
Non-equipment electric EUI of hosp. **- Site kWh/m^2-yr**	Pending data collection and analysis.
Electrical EUI of patient room area **- Site kWh/m^2-wk**	Pending data collection and analysis.
Non-equipment electrical EUI, D&T **- Site kWh/m^2-wk**	Pending data collection and analysis.
Lighting power in patient room area	Base on IESNA standards.

- **Installed W/m^2**	
Illumination in patient room area: lux	Base on IESNA standards.
Medical equipment, plug loads of patient room areas: Site kWh/m^2-wk	Pending data collection and analysis.
Energy intensity of large medical equipment: **- Site kWh/yr** **- Site kWh/unit activity**	Pending data collection and analysis.

6. BMS/SCADA and ICT infrastructure analysis

6.1. CEN UNI EN 15232 analysis

A first analysis of the level of automation of the four hospitals involved in the Green@Hospital project has been done starting from the standard CEN UNI EN 15232. This standard contributes at establishing convention and methods for estimating the impact of building automation and control systems and technical building management on energy performance and energy use in buildings.

In the check-list proposed by the standard, the functions that have an impact on the energy performance of buildings are listed. They concern functions for automatic control, functions for home automation system/building automation and control system and functions for technical home and building management.

During the first preliminary analysis it is possible to check the status of the building automation by filling the check-list.

The analysis performed can be found attached in the D2.1_Annex_First solution sets. It reports for each hospital, the actual level of automation by means of the red label. The green and yellow labels are the desired level of automation for the considered system.

6.2. BMS/SCADA and ICT infrastructure check-list

WP2 Pilot's solution set data analysis has the final objective of identifying the list of the energy saving solution sets and the associated energy saving potential.

The solution sets to be modelled and analysed will be chosen not only considering their energy saving potential and their impact on the hospital energy balance but also analysing the possibility to integrate them in the Web-EMCS which is the main final output of the project.

That is why Task 2.2 of the Work Package 2 is dedicated to the analysis of the BMSs and of the ICT infrastructure of each hospital. Even if some initial information were collected during the preparation phase of the project, some more data are needed to understand the real integration potential of each solution. This document aims at providing a checklist to the auditors to collect the information needed to understand if each solution set can be integrated and how.

Task 2.2 is strongly linked to WP3 - ICT infrastructure and integration: the information collected in Task 2.2 will be used to define the integration strategy which allows the communication between the system analysed and the Web-EMCS with the lowest impact on costs.

Levels of integration

The integration between the system analysed and the Web-EMCS can be at three different levels: field level, controller layer, supervisor layer.

In the first case the Web-EMCS communicates directly with sensors and actuators. The control strategies are directly implemented on the Web-EMCS which autonomously manages the system. In this case a great developing effort is required, in fact this control strategy can be developed just for simple systems with a small amount of I/O signals.

In the second case the Web-EMCS communicates directly with the controllers. The control strategies and control algorithm are resident on the controller but often supervisor exchanges parameters with the controllers. The communication with the controllers is not always possible: serial communication protocols allow the communication between just one supervisor (master) and its controllers (slaves). It means that it will not be possible to create a communication between the Web-EMCS and the controllers if a supervisor is already installed.

In the third case the Web-EMCS communicates directly with the supervisor. In this case the communication between the Supervisor and the Web-EMCS can be realised for example using the Web service communication technology.

Check-list

In the framework of Task 2.2 each hospital will provide a complete list of all the management systems committed with energy management:

- BMS (Building Management System)
- SCADA (Supervisory Control And Data Acquisition) systems
- HVAC management systems
- Lighting management systems

In the rest of the document the word 'Systems' will be used to address in general the elements of the list above.

The information about the systems will be collected following the format provided in the attached document "D2.1_Annex_BMS-SCADA-ICT checklist".

It is composed by three sheets. The first sheet is addressed to the Energy Manager of the hospital, while the last two sheets collect the technical information about the systems mentioned before.

In Systems List sheet it is asked to describe the main characteristics of the systems.

In particular, the first block of fields of the check-list aims at obtaining a qualitative description of the control system analysed and some information about who usually manages the system. Furthermore, it helps collecting some key information as system vendor, name, code and version.

The second block of fields helps the auditor in understanding the system architecture: number of devices controlled, number of controllers or data concentrators and I/O list are key information to understand the potential of the system.

The last block of fields refers to integration features: the information collected will help the auditors to understand how to integrate the system analysed.

Two more documents can be attached to this check-list to increase the amount of information available:

- A list of devices controlled by the system
- A list of I/O monitored or controlled

In the last sheet it is asked to fill some questions and tables, customised for each category of device controlled. They can be used to collect more detailed information particularly if the list of I/O is not available.

To complete this section of information collection, it is asked to attach the functional diagrams and the construction documents that show the position of the equipment and devices indicated in the check-list.

7. Pilot cases

7.1. Actual energy performance evaluation

The first analysis to be conducted in the four pilot cases is a collection of general characteristics of the buildings and of the energy consumption data.

The information will be collected in the energy audit report form and will help understanding the buildings and their needs in terms of energy efficiency improvement. On the basis of the analysis of the solution found it will be possible to better understand which are the most important end uses that we need to monitor and which energy meters are needed.

In order to come up with an accurate energy and water consumption profile some critical data measuring capabilities are required. The following is a general list of the instrumentation that may be installed in the facility.

- Water meters
    - Municipality and/or well water supply lines to the building (if applicable).
    - Discharge lines from softeners and reverse osmosis systems.
    - Main domestic hot water line.
    - Make-up line feeding cooling towers.
    - Make-up line feeding steam boilers.
    - Main irrigation water line.

- Energy meters
    - Across the water-side of chillers, evaporators, and condensers.
    - Across each steam and hot water boiler.
    - Across each solar hot water heating system.
    - Across heat recovery equipment such as heat recovery steam generators.

- Electric energy meters
    - For each main distribution board.
    - For each lighting and auxiliary power panel board above 20 A rating.
    - For each electrical equipment above 5 kW rating.

- Fuel/gas meters
    - For facility kitchen equipment.
    - For each generator.
    - For each boiler.

- Run hour meters
    - For each electrical equipment above 5 kW rating.
    - For each air handling unit.
    - For each boiler.
    - For each water treatment unit.

Run hour meters are a key component in any energy monitoring and verification program and are therefore essential.

- Flow/mass meters (this function could be provided by the energy meter)
    - Chilled and hot water in main lines.

Following the main quantities to measure are listed:

- Temperatures (this function could be partly provided by the energy meter)
    - Approach temperatures for chillers, evaporators, and condensers.
    - Boiler supply temperature.
    - Air handling units air supply and return temperatures.
    - Air handling units supply and return temperatures across chilled and hot water coils.
    - Temperatures across heat recovery equipment.
    - Space temperature for important areas (1/2 hour sampling).
    - Outside ambient temperature (1/2 hour sampling).
- Pressures
    - Across each pump and booster set above 0.5 kW.
    - Steam boiler outlet.
- Relative humidity
    - Space relative humidity.
    - Outside relative humidity.

It is important to calibrate the measuring instruments at predetermined intervals. The accuracy of instruments is critical for a sound energy management program. Flow meters should particularly be maintained regularly to ensure accurate readings, as they are the main source of errors in a data monitoring system.

A better customized proposal of meters and sensors installation will come from the auditors' analyses.

Already available information

The information already available for each hospital is listed below.

Hospital de Mollet (HML): during the hospital design process the objectives of high efficiency and comfort have been pursued and efficient energy production was integrated (geothermic heat pumps). IFTEC has provided the building management system. More sensors are needed to implement optimized control algorithms.

Hospital Virgen de las Nieves (SAS): this hospital has an extended energy management system with a dedicated network system. Neither in this hospital an ICT based optimization has been performed. Particular interest in the possibility to extend the interaction between the end user and the building management system.

Ospedali Riuniti di Ancona (AOR): this hospital is equipped with a different energy management system for lighting control and HVAC control. In this Hospital an innovative Data Centre solution has been running since September 2011: a supervisory system monitors both the behaviour of the IT infrastructure and the performances of the cooling system.

Hospital of Chania (SGH): this hospital is equipped with different energy management systems for lighting control and HVAC control. The integration of all energy demands measurements for energy use of different device should provide a great saving potential.

7.2. First analysis of solution sets

7.2.1. Hospital Virgen de las Nieves (HVN)

The criteria used to select systems that could be studied are the following:

- Involving significant savings
- Solutions can be replicated inside and outside the HVN
- Sufficient information is available
- Solution can be applied with not too much difficulty
- The chosen system has continuity during project development.

As for the different systems taken into consideration some comments follow in the next part of the paragraph.

Air Handling Units

It is quite likely that the main solution implemented in Granada is a centralized control of several air handling units they have installed in the hospital. Similarly to the surgery rooms, the strategies in the AHUs are already in the list, as they are basically about controlling the amount of fresh air and its conditions. Maybe we will also include “night free cooling” (since the day-night temperature swing in Granada makes it convenient)

In some there (AHU) there is a high level of control (temperature, humidity, free cooling, speed variation, humidifiers) (10%), in other control level is low (75 %). The rest has a mean level of control.

- The large number of units involves a considerable consumption
- It would be appropriate to raise the level of control

Cogeneration plant

The hospital in Granada features a cogeneration system that could be optimized. However, it is very unlikely that this system will be included in the G@H project because it has a closed control system, and a proper analysis requires a great deal of data that it is not available right now.

Nevertheless, it could be good to have related measures in the preliminary list. Here follow some more comments:

- The list of variables can be excessively large (economic variables including)
- It is related to other systems (electricity, cooling towers, systems for hot water production, or absorption chiller)
- Powers of the power station
- The control level is low,
- The level of energy losses are not known although probably important
- We do not know if the system can be replicated in other centers.
- This analysis would be very interesting for HVN.
- Studying this system needs the support of all partners of the project because of its complexity

DATA CENTER

- This data center may be compared to the one in Ancona.

- In case of very little information on the DC in Granada, we would say that the "solutions" to be tested (both in Granada and Ancona) are related to space conditioning strategies:
    - Free cooling
    - Reset of supply air temperatures and air flow (maybe according to computing load, outdoor air conditions…)
- The solutions themselves are fairly similar to those of a "conventional" AHU – the difference is in the "working conditions" (e.g., a DC can likely operate at a higher temperature than a surgery room)

Here are some more comments:

- This system is in continuous growth by increasing the number of servers.
- Thermal loads are therefore not stable.
- There are some problems with overheating.
- It has a dedicated chiller system and control system intermediate.
- The specific energy consumption in not known as a fraction of the total consumption.
- It is intended for short-term reform.

Hydraulic distribution system

- It has a medium level of control but yet makes programming
- The level of energy losses is not known
- We do not know if the system can be replicated in other centers

7.2.2. Hospital de Mollet (HML)

Geothermal system

This could be regarded to as "a seasonal storage system" (we store heat in the summer to use it in the winter, and vice versa). Conceptually, the "solution" here is to use the stored energy "when it makes the most sense" (i.e., when the environmental conditions for generating heat or cold with the conventional systems are bad).

With reference to CEI UNI EN 15232, the modelling of this case can be inscribed in 3.8 Solution Set (sequencing of generators) where the other gens would be chillers, heat pumps, etc. Then the model could seek to improve the global efficiency of the pack (i.e. based on demand, individual efficiency).

The solution may be like: "Energy storage management/control" or "Storage management based on both real time readings and predicted energy use".

Surgery rooms

The solutions in this case are already in the list, since it is basically about controlling the amount of fresh air (and its conditions of temperature and RH) according to the actual requirements in the room (i.e., only when the rooms are occupied, etc…).

Operating rooms

The solution would improve the HVAC model to add control over microbiological conditions or particle density in the inlet air, thus opening great possibilities of improving efficiency (i.e. reducing air pressure, fresh air flow, increasing heat recovery,).

There is new regulation on this subject coming in Spain.

7.2.3. Ospedali Riuniti di Ancona (AOR)

Concerning Ancona, the solution sets referring to HVAC and lighting are already included in the EN 15232 or can be considered as a combination of them. Particular focus will be put on occupancy.

Concerning the Data Centre we can classify the solutions into three categories:

- IT solutions: server virtualization, client virtualization (under discussion)
- HVAC solutions: free cooling, In row cooling units optimized control, chillers optimized control
- Logistic solutions: server concentrated and compartmented in a single area

7.2.4. Saint George Hospital (SGH)

Heating Control

For heating control it is proposed for the emission control “Individual room control with communication”. Since no Thermo - active Building System (TABS) is installed no improved system can be suggested.

Moreover all the solutions which are proposed cannot affect the whole heating system of the hospital. However control of distribution pumps can be achieved and can reduce the auxiliary energy demand for the pumps.

Apart from that, advanced control can be applied in the emission and /or distribution system since it can be applied only in the area that is investigated.

Finally, since all generators are similar for the whole hospital they cannot be affected for the specific project.

Domestic Hot Water Supply Control

For domestic hot water supply control no solution set is suggested since the system is controlled for the whole hospital.

Cooling Control

Similar to heating control, for cooling control it is proposed for the emission control "Individual room control with communication". Since no Thermo - active Building System (TABS) is installed no improved system can be suggested. Moreover all the solutions which are proposed cannot affect the whole heating system of the hospital. However control of distribution pumps can be achieved and can reduce the auxiliary energy demand for the pumps. Apart from that advanced control can be applied in the emission and /or distribution system since it can be applied only in the area that is investigated. Finally, since all generators are similar for the whole hospital they cannot be affected for the specific project.

Ventilation and Air Conditioning Control

For the ventilation which is mechanically provided in the areas of the hospital it is suggested as a solution set to run the system based on the presence in the rooms. Free mechanical Cooling can be applied during spring and autumn to minimize the amount of mechanical cooling. The supply air temperature control is currently set manually by the B.E.M.S operator. As a solution set, the set point can be set as a variable depending on the outside temperature. Finally regarding humidity control, direct humidity control is already applied and no improvement can be suggested.

Lighting Control

For the lighting system it is suggested that there should be occupancy control with automatic detection (Auto On/ Dimmed Off). Apart from that Daylight control can contribute to the reduction of auxiliary energy.

Blind Control

Since no blinds are installed no control can be applied.

Technical Home and Building Management

The system currently installed provides support to the diagnosis of faults. As a solution set the system can report information regarding energy consumption, indoor conditions and possible solution based on comparison with an optimized system running at the same period.

8. Conclusions

This deliverable presents the procedures for a better analysis of the different energy saving solution sets that will be tested in the pilot hospitals.

In order to define in the best way the necessary skills to the development of the project, a skill assessment matrix has been developed analysing the required skills for the different expected tasks. The skill assessment matrix gives a contribution in the definition of the necessary skills and helps defining the next steps actors. The next step for the completion of the matrix is to identify the people and the partners that can carry out the different tasks.

Starting from a hospital stakeholders' analysis, a comfort questionnaire has been set, taking into consideration the peculiarities of the different systems, departments and addresses. When all of the questionnaires will be completed, their analysis will help in the solution set definition and in their customisation. The results of the questionnaires analysis will help to identify the comfort status of the buildings inhabitants and to collect suggestions on systems operation and possible improvements to be analysed during the audits.

During a preliminary analysis of the buildings, a set of energy improvements has been supposed. In order to deepen the analysis, some information are needed (the characteristics of the building envelope, the systems installed, the energy consumption, the energy use breakdown, etc.). This information will be collected starting from an energy audit report format that will be filled focusing on the specific area where the solution will be tested.

As this project is mainly focused on the solutions that involve BMS/SCADA/ICT systems, a different check-list has been proposed for the collection of those systems characteristics. The filling of these check-lists will provide information on the systems already installed and suggestions for next improvements.

Hospital energy use varies according to many specific factors such as type of patient, type and length of treatment, use of specific medical equipment, availability (or not) of energy intense services such as laundry or kitchen, etc. All these factors make comparison among hospital energy needs very difficult, precluding a sound evaluation of energy performance. In order to better analyse the data gathered during the audit, performance metrics have been studied in this phase. The definition of the performance metrics helps to build a benchmark among the pilot cases and among the future possible additional hospitals.

References

- CEN UNI EN 15232:2012, "Energy performance of buildings – Impact of Building Automation, Controls and Building Management"
- ASHRAE: Procedures for Commercial Building Energy Audits. ASHRAE 2004.
- ASHRAE: Advanced Energy design Guide for Large Hospitals. ASHRAE 2012.
- ASHRAE Standard 105: Standard Measures of Measuring Expressing, and Comparing Building Energy Performance. ASHRAE, 2007.
- Environment Science Center, Bristol-Myers Squibb Company, Greener Hospitals: Improving Environmental Performance (2003).
- LEED Reference Guide for Building Design and Construction: Healthcare Supplement. U.S. Green Building Council 2009.
- Tom, S. Managing Energy and Comfort. ASHRAE Journal, June 2008.
- Brett C. Singer, Paul Mathew, Steve Greenberg, William Tschudi, Dale Sartor, Susan Strom, Walter Vernon, Mazzetti Nash, Lipsey Burch, Hospital Energy Benchmarking Guidance – Version 1.0, LBNL Report LBNL-2738E, October 2009
- M. Deru ,P. Torcellini, Performance Metrics Research Project – Final Report
- Technical Report NREL/TP-550-38700, October 2005
- KM. Fowler, N. Wang, MP.Deru, RL.Romero, Performance Metrics for Commercial Buildings, September 2010
- Erik Greensfelder, Hannah Friedman, Eliot Crowe, Building Performance Tracking in Large Commercial Buildings: Tools and Strategies, Subtask 4.4 Research Report: Characterization of Building Performance Metrics Tracking Methodologies, November 2010
- D. Barley, M. Deru, S. Pless, and P. Torcellini, Procedure for Measuring and
- Reporting Commercial Building Energy Performance, Technical Report
- NREL/TP-550-38601,October 2005
- Energy Efficiency in Hospitals Best Practice Guide, USAID ECO-III Project, March 2009
- K.M. Fowler, A.E. Solana, K.L. Spees, Building Cost and Performance Metrics: Data Collection Protocol, September 2005
- BSR/ASHRAE Standard 55P, Thermal Environmental Conditions for Human Occupancy 2/24/03 Most Current Draft Standard
- Gregg Woodall, SMART 2011 / 0072: Methodology for energy--efficiency measurements applicable to ICT in buildings (eeMeasure) D1.2 Non-residential methodology Version 1.0 ,March 2011

- Recommendations for Measuring and Reporting Overall Data Center Efficiency, Version 2 – Measuring PUE for Data Centers,17 May 2011
- http://energyiq.lbl.gov/benchmark.html.
- http://www.energystar.gov/index.cfm?c=evaluate_performance.bus_benchmark_comm_bldgs
- http://www.energystar.gov/index.cfm?c=healthcare.bus_healthcare

Annexes

- D2.1_Annex_Skill Assessment Matrix
- D2.1_Annex_Energy Audit Level I Report
- D2.1_Annex_First solution sets
- D2.1_Annex_ BMS-SCADA-ICT check-list