CHAPTER 10

Estimating Repair Costs

OBJECTIVES

After reading this chapter, you should be able to:

- Explain the general purpose of damage estimates.
- Manually and electronically prepare an estimate.
- Outline the sequence for evaluating vehicle damage.
- Describe the method of determining the repairability of a damaged vehicle.
- Using gathered information, determine whether damaged parts should be repaired or replaced with new ones.
- Explain the difference between flat-rate labor time and overlap labor time when estimating repair costs.
- Calculate material costs based on a refinishing materials list.
- Use computer-based estimating programs.
- Describe the benefits of using a digital camera, handheld computer, personal computers, and estimating software when preparing estimates.
- Answer ASE-style review questions relating to the estimating process.

INTRODUCTION

An *estimate*, also called a *damage report* or *damage appraisal*, calculates the cost of parts, materials, and labor for repairing a collision damaged vehicle. Developed by the estimator and equipment available, it is a handwritten or printed summary of the collision repairs needed. The estimate lets the customer, insurance company, shop management, and technician know what must be done to repair a vehicle.

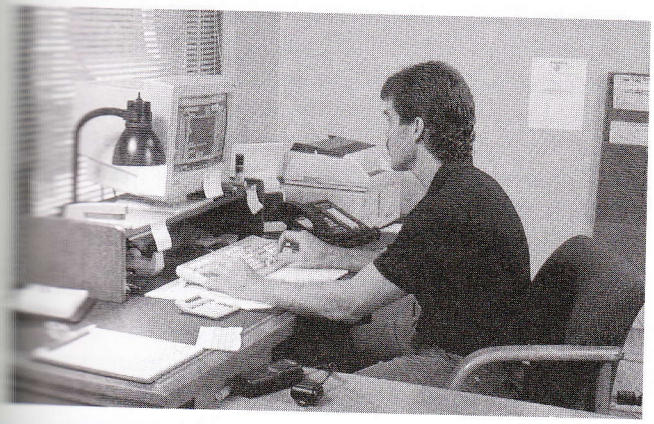

FIGURE 10–1 Estimators must have a thorough knowledge of vehicle construction, collision repair methods, and the use of computers to develop accurate estimates of repair costs.

Estimates must be accurately written. Repair costs are a major consideration for both the owner and the collision repair shop. The profit margins for a collision repair shop depend heavily on the accuracy of estimates. Insurance companies can also write their own estimates.

This chapter will help you understand how both handwritten and electronic or computerized estimates are prepared (Figure 10–1).

10.1 THE ESTIMATE

To understand computer-based estimating, you must first understand how a handwritten estimate is done. Basically, a *handwritten estimate* involves using a pen and paper or a printed form to list all of the information needed to calculate

and bill the customer or insurance company for doing the repairs.

Before any decision involving the repair of a damaged vehicle can be made, a detailed repair estimate must be calculated and printed. All of the parts and procedures that must be completed are listed on the estimate. Then part prices and labor charges can be tabulated.

Although printed estimating guides are still used in the industry, the trend is to use computer-based estimating tools (Figure 10–2).

Before writing the formal damage report, preliminary information that identifies the owner of the vehicle and who will pay the bill must be obtained. This includes the VIN, make, year, body style or type, license plate number, mileage, and date (Figure 10–3).

A

B

FIGURE 10–2 Damage reports and estimates require reference to part and material prices, labor times and rates, and other information. Both printed estimating guides and computer programs are available to retrieve this information. *(Courtesy of Mitchell 1)* (**A**) Collision estimating guides give exploded views of major body assemblies with the part prices and the book labor times required to replace or repair each part. (**B**) Computer-based estimating speeds access and tabulation of repair costs. The manuals are on compact discs, and information can be accessed with simple mouse clicks.

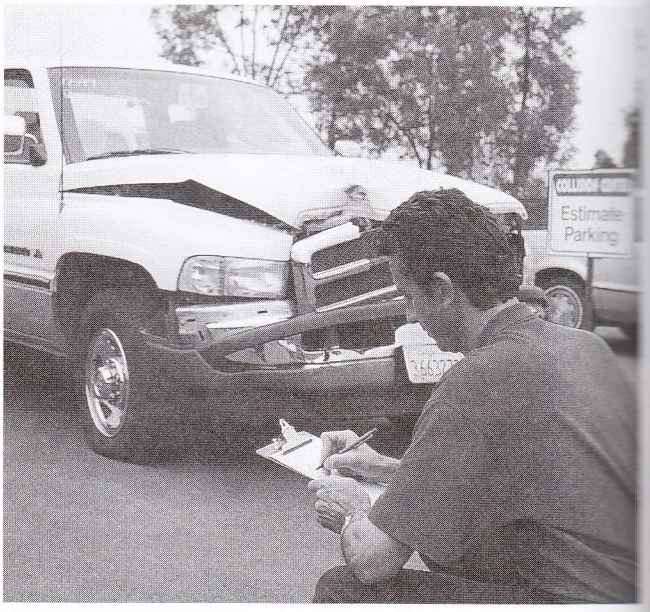

FIGURE 10–3 Some small body shops still prepare estimates manually. A preprinted paper estimating form is filled out with a pen or pencil. After referring to estimating book values, all parts, materials, and labor costs can be calculated for a total cost to repair the vehicle damage. *(Courtesy of Mitchell 1)*

All parts that need to be replaced or repaired must be identified. A detailed description of all the labor operations that must be performed with a listing of parts and materials needed to make the necessary repairs can then be prepared.

A copy of the estimate is then given to the customer. Estimate information—pricing of labor, parts and materials, and their totals—is then compared to estimates from competing body shops. A written estimate is needed to prevent any misunderstanding between the shop, the insurance company, and the vehicle owner.

At least three copies of the written estimate should be made. One is kept by the shop, one is given to the insurance company, and the other is given to the customer. An estimate is an *approximate bid* for a given period of time—usually for 30 days. The reason for a specified time period is obvious: part prices change and damaged parts can deteriorate.

Most body shops provide damage reports or estimates free of charge. Because estimate preparation can involve a considerable amount of time and paperwork, some body shops charge a flat fee for the estimate.

DIRECT REPAIR PROGRAMS

Direct repair programs (DRPs) are made up of cooperating insurance companies and body shops. An insurance company will approve a body shop for repairing vehicles insured by that insurance company. The insurance company will have its customers take their damaged vehicles to one of the approved body shops for repairs. This eliminates the time needed to obtain and approve one of several estimates.

The estimate is considered authorization to complete the repair work as listed, but only when it is agreed upon and signed by the vehicle owner or by the insurance company appraiser. The estimate explains the legal conditions under which the repair work is accepted by the collision repair shop. It also protects the shop against the possibility of undetected damage that might be revealed later as repairs progress.

INSURANCE DEDUCTIBLES

Many insurance policies contain a **deductible clause**, which means that the owner is responsible for a given amount of the bill, usually the first $100 to $1,000. The remaining cost is paid by the insurance company. In such cases, both the customer and insurance company should authorize the estimate.

ESTIMATE TIME FACTORS

There are additional factors to be considered when writing an estimate. Such added time is usually negotiated between the estimator and the insurance company or customer and includes the following:

- Setting the vehicle on a frame machine and damage diagnosis
- Pushing, pulling, cutting, and so on to remove collision-damaged parts; called **access time**
- Straightening or aligning related parts
- Removing undercoating, tar, grease, and similar materials
- Repairing rust or corrosion damage to adjacent parts
- Freeing rusted or frozen parts
- Drilling for ornamentation or mounting holes
- Filling or plugging unneeded holes in new parts
- Repairing damaged replacement parts prior to installation
- Checking suspension and steering alignment/toe-in
- Removing shattered glass
- Rebuilding, reconditioning, and installing aftermarket parts, *not* including refinishing time
- Applying sound-deadening material; undercoating, caulking, and painting of the inner areas
- Restoring corrosion protection
- Removing and installing (R&I) main computer module when excessive temperatures (above 176°F or 80°C) are necessary in repair or paint drying operations
- Removing and installing wheel or hub cap locks
- Replacing accessories such as trailer hitches, sunroofs, and fender flares

WORK ORDERS

Another important function of the estimate is that it serves as a basis for writing the work order or operational plan. It is usually prepared from the damage appraisal of the estimator (using the written estimate) and a visual inspection by the shop supervisor and/or a technician.

The **work order** is a printed form that outlines the procedures that should be taken to return the vehicle to its preaccident condition. It is a valuable tool to the technician, estimator, and shop supervisor. The work order summarizes the actual methods necessary to do the repairs on a specific vehicle. Technicians are given the vehicle work order before starting repair work. The work order is often clipped on the vehicle or on the technician's toolbox for easy reference.

USING ESTIMATING GUIDES

Discussed briefly in Chapter 3, *collision estimating guides* help with filling out the estimate by listing part and labor costs (Figure 10–4). Whether in printed or electronic form, estimating guides contain:

- Lists of vehicle makes and models in the contents or index
- Section indexes for major part assemblies for each vehicle
- Illustrated parts breakdowns
- Part names and numbers
- Flat rate times
- Part prices
- Other information

Collision estimating guides, also known as collision damage manuals (Figure 10–5), are essential tools of the estimator. They contain such items as vehicle identification information, the price of new or recycled parts, the amount of time needed to install the parts, identification of almost any part of the car from the front bumper to the rear bumper, and refinishing data, such as paint code references.

Estimating guides are often published and updated at different times of the year when manufacturers change prices or make model revisions. The information in these guides is of value to body technicians and refinishers. You should be able to read and understand them (Figure 10–6).

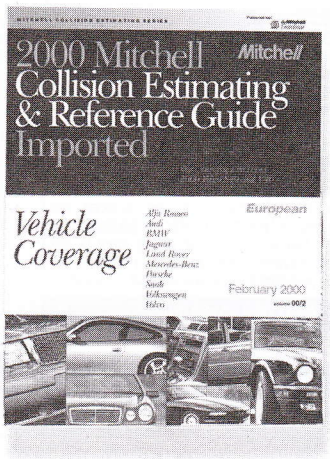

FIGURE 10–4 Estimating guides and books provide illustrations, part numbers, and repair time for each make and model vehicle. *(Courtesy of Mitchell 1)*

SUNFIRE 1995-02

SECTION INDEX

A/C /Heater/Ventilation 891
A/C Refrigerant Capacities 891
ABS/Brakes 893
Air Bag System 892
Air Cleaner 896
Back Window 905
Center Console 899
Clear Coat Identification 889
Convertible Top 905
Cooling 890
Cowl & Dash 898
Cruise Control System 893
Electrical 897
Emission System 897
Engine Mounts 896
Engine/Trans 896
Exhaust 897
Floor 901
Front Bumper 889
Front Door 902
Front Drive Axle 894
Front Fender 892
Front Inner Structure 892
Front Lamps 890
Front Seat 901
Front Steering Linkage/Gear 895
Front Suspension 893
Fuel Tank 908
Hood 890
Information Labels 889
Instrument Panel 898
Luggage Lid 907
Paint Code Location 889
Quarter Glass 907
Quarter Panel 905
Rear Body 908
Rear Bumper 910
Rear Door 903
Rear Lamps 909
Rear Seat 901
Rear Suspension 908
Rocker/Pillars 900
Roof 904
Seat Belts 901
Special Cautions 889
Steering Pump 895
Steering Wheel/Column 895
Sunroof 904
Underhood Dimensions 892
Wheel 893
Windshield 898

SPECIAL CAUTIONS

AIR BAG

Refer to Procedure Explanation 29 for Supplemental Restraint/ Air Bag Special Cautions.

ANTILOCK BRAKE SYSTEM

Certain components in the Antilock Brake System are not intended to be serviced individually. Attempting to remove or disconnect certain system components may result in personal injury and/or improper system operation. Only those components with approved removal and installation procedures should be serviced.

SEAT BELTS

Replace belts, retractors and hardware in use during all but a minor collision. Restraint systems should be replaced and anchorages properly repaired if they were in areas damaged by a collision, whether the belt was in use or not. If there is any question, replace the belt system. Damage, whether visible or not, could result in serious personal injury in the event of an accident.

PAINT CODE LOCATION

Paint code located on spare tire cover in trunk.

CLEAR COAT IDENTIFICATION

All colors are clear coat.

INFORMATION LABELS

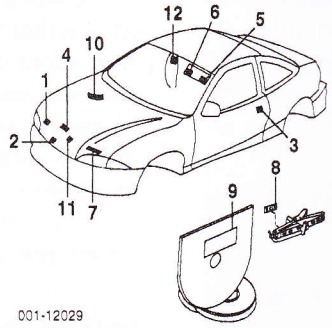

001-12029

1 **Label, A/C Charging¶**		22640332		9.55
¶Order by Application				
2 **Label, Belt Routing**				
2.2L Eng	95-97	10171018		9.55
	98-01	24575714		9.55
	02	N.A.		0.00
3 **Label, Child Lock**	R/L	22578972		9.55
4 **Label, Fan Blade Caution¶**		10120010		9.55
¶Order by Application				
5 **Label, SIR Systems Caution**		15001737		9.25
6 **Label, SIR Systems Info**	95-96	15001739		9.25
7 **Label, SIR Sensor Service**		10247726		9.55
8 **Label, Jack Caution¶**		21011879		9.55
¶Order by Application				
9 **Label, Information**				
Spare Storage	95-99	22614521		9.25
Jack Usage	98-01	22614521		9.25
	02	N.A.		0.00
10 **Label, Emission¶**				
2.2L Eng				
Man Trans				
w/Calif Emissions		24575930		0.00
w/o Calif Emissions		24575620		0.00
Auto Trans				
w/Calif Emissions		24576253		9.25
w/o Calif Emissions		24576000		9.55
2.3L Eng, 2.4L Eng				
Man Trans				
w/Calif Emissions		24576237		9.25
w/o Calif Emissions		24575319		8.33
Auto Trans				
w/Calif Emissions		24575339		8.33
w/o Calif Emissions		24575318		8.33
¶Order by Application				
11 **Label, Lifting Instruction**	95-01	22588328		9.55
	02	22679118		9.25
12 **Label, Odometer Service**		10443718		9.25

FRONT BUMPER

W/GT MODEL 1995-99

Refinish Front Cover 2.5
R&I Bumper Cover Assy ..... #1.5
#Includes R&I/R&R Lower Radiator Air Baffle & Splash Shields
O/H Bumper Cover Assy (Includes R&I) ..... #2.5
#Includes R&I/R&R Lower Radiator Air Baffle, Splash Shields, Park/Signal Lamps & Side Marker Lamps

NOTE: All Parts in this section are included in overhaul unless noted otherwise.

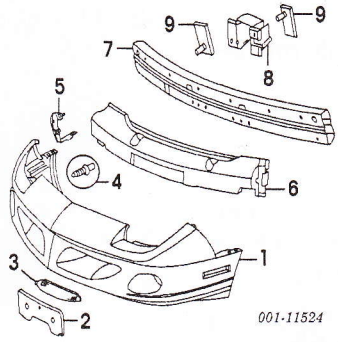

001-11524

1 **Cover, Front (P)**		22597555	#1.9	400.00
(P) Paint to Match				
#Includes R&I/R&R Lower Radiator Air Baffle, Splash Shields, Park/Signal Lamps & Side Marker Lamps				
2 **Brkt, License**		22594636	.2	3.45
3 **Grille, Front Cover**	R/L	22599196-7	.2	5.35
4 **Retainer, Push-In (4)**		20699808		.39
5 **Retainer, Outer Cover**	R	22574624		7.20
	L	22629293		7.10

6 **Absorber, Impact**		16516749	IOH	105.00
7 **Bar, Impact**		22608945	IOH	284.00
8 **Brkt, Impact Bar**	R/L	22595724-5	#.8	13.10
#w/Bumper Assy Removed, Not Included in O/H, Included in R&R Side Lower Rail Assy				
9 **Plate, Stud (2/Side)**	R/L	22598028		3.45

W/GT MODEL 2000-02

Refinish Front Cover 2.6
Refinish License Plate Brkt 5
R&I Bumper Cover Assy ..... #1.5
#Includes R&I/R&R Lower Radiator Air Baffle & Splash Shields
O/H Bumper Cover Assy (Includes R&I) ..... #2.8
#Includes R&I/R&R Lower Radiator Air Baffle, Splash Shields, Park/Signal Lamps & Side Marker Lamps & Fog Lamps

NOTE: All Parts in this section are included in overhaul unless noted otherwise.

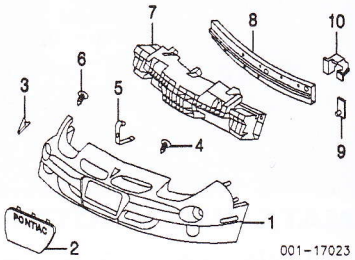

001-17023

1 **Cover, Front (P)**		12335340	#2.2	234.00
#Includes R&I/R&R Lower Radiator Air Baffle, Splash Shields, Park/Signal Lamps, Side Marker Lamps & Fog Lamps				
2 **Brkt, License Plate (P)**		12365279	.2	24.20
(P) Paint to Match				
3 **Emblem (Adhesive)**		22658036	.2	6.80
4 **Retainer, Push-In (4)**		10121502		.25
5 **Retainer, Outer Cover**	R	22574624		7.20
	L	22629293		7.10
6 **Retainer, Push-In (4)**		20699808		.39
7 **Absorber, Impact**		22600628	IOH	119.00
8 **Bar, Impact**		22608945	IOH	284.00
9 **Plate, Stud (2/Side)**	R/L	22598028		3.45
10 **Brkt, Impact Bar**	R/L	22595724-5	#.8	13.10
#w/Bumper Assy Removed Not Included in O/H, Included in R&R Side Lower Rail Assy				

W/O GT MODEL 1995-99

Refinish Front Cover 2.5
R&I Bumper Cover Assy ..... #1.5
#Includes R&I/R&R Lower Radiator Air Baffle & Splash Shields
O/H Bumper Cover Assy (Includes R&I) ..... #2.3
#Includes R&I/R&R Lower Radiator Air Baffle, Splash Shields & Park/Signal Lamps

NOTE: All Parts in this section are included in overhaul unless noted otherwise.

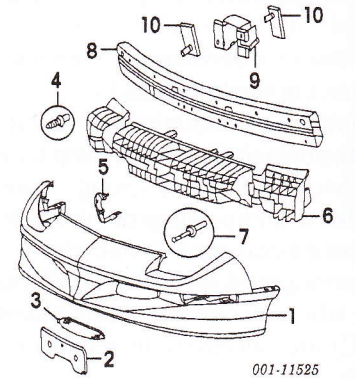

001-11525

1 **Cover, Front (P)**		22597554	#1.8	214.00
(P) Paint to Match				
#Includes R&I/R&R Lower Radiator Air Baffle, Splash Shields & Park/Signal Lamps				
2 **Brkt, License**		22594635	.2	10.50
3 **Grille, Front Cover**				
Coupe	R/L	22598286-7	.2	5.65
Convertible	R/L	22599196-7	.2	5.35
4 **Retainer, Push-In (3)**	R/L	15958694		.37
5 **Retainer, Outer Cover**	R	22574624		7.20
	L	22629293		7.10

FIGURE 10–5 Study this actual page from an estimating guide book. The section Index lists major parts, assemblies, or systems that may have to be repaired on a specific year, make, and model vehicle. The numbers on the part illustrations correspond with the numbers in the column list of parts. *(Courtesy of Mitchell 1)*

Primary group heading

Numbers correlate

Assembly remove and reinstall (R & I) operation time

Basic part group

Assembly overhaul operation time

Remove and replace (R & R) operation time

High-strength steel designation

Manufacturer's special marketing price designation

Footnote

FRONT BUMPER

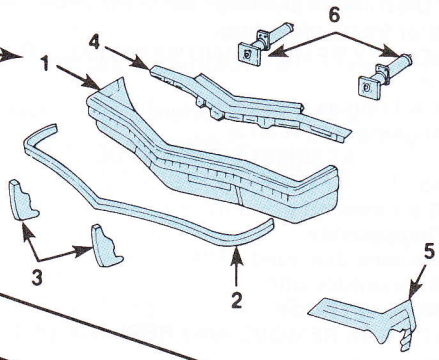

FRONT BUMPER, CHROME

	Assembly R & I			0.6	
	overhaul			1.8	
1	Face bar (HSS)		205.00	■1.8	1256605
2	cushion		27.75	0.4	1257285
3	guard	RT	27.50	0.2	25505768
		LT	27.50	0.2	25505769
	Fillers				
4	centers (p.5)		26.00	0.3	1258815
5	end (p.5)	RT	13.85	0.3	1256056
	(p.5)	LT	13.85	0.3	1256057
6	Energy absorber		A40.00	•0.3	22009010

■ *Time is for overhaul*
• *After bumper is removed*

DOOR

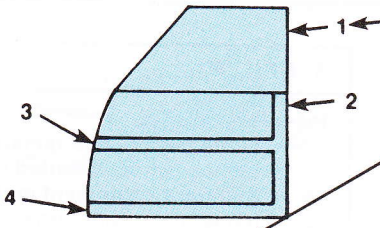

2 DOOR MODELS
REFINISHING NOTES

Deduct for overlap when necessary.
Add for clear coat if required

	door shell			1.4	
	PARTS & LABOR				
1	Door shell (p 2.8)	RT	462.00	3.5	20278918
	(p 2.8)	LT	462.00	3.5	20278919
	Outer panel (p 2.5)	RT	105.00	4.5	20178366
	(p 2.5)	LT	105.00	4.5	20178367
	Molding				
2	edge guard	RT	D8.05	0.1	20160804
		LT	D8.05	0.1	20160805
3	side adhesive		13.30	0.3	1154699
4	lower (d.2)	RT	21.60	0.3	9635063
	(d.2)	LT	21.60	0.3	9635064
	Glass				
	GM, clear	RT	157.00	1.0	2032034
		LT	157.00	1.0	2032035
	NAGS, clear	RT	175.00	1.0	D5744C
		LT	175.00	1.0	D5745C

Illustrated part callout number

Additional information pertaining to the refinishing operation

Part description

Paint operation time

Vehicle manufacturer's (OEM) suggested retail price

Discontinued part designation

Drilling operation time

NAGS part number

NAGS suggested retail price

FIGURE 10-6 Study how an estimating guide gives part pricing and labor time information.

1. BUMPER

FRONT OR REAR

NOTE: Disconnect at energy absorber (mounting bracket) or frame mounting.

ASSEMBLY REMOVE AND REINSTALL (R & I)

Included:
- R & I unit as assembly
- Alignment to vehicle

ASSEMBLY OVERHAUL

Included:
- R & I assembly
- Disassemble
- Replace damaged parts
- Reassemble unit
- Align to vehicle

FACE BAR REMOVE AND REPLACE (R & R)

Included:
- R & R face bar
- R & I guards and face bar cushions (unless otherwise noted in text)

ALL BUMPER OPERATIONS

Does Not Include:
- Additional time for frozen or broken fasteners
- Refinishing
- Optional moldings, name plates, emblems, and ornamentation; air bags and lamps
- Stripe tape, decals, overlays
- Removal of hydraulic energy absorbers
- Aim headlamps

2. FRAME

UNITIZED

Included:
- Welding as necessary and electrical wiring
- Floor mats, insulation, and trim (if required)

Does Not Include:
- Setup on frame machine and damage diagnosis
- R & I of all bolted-on parts and body sheet metal
- Wheel alignment
- Refinishing, undercoating, sound deadening material, and anticorrosion protection
- Removal of adjacent panels
- Time for pulling

CONVENTIONAL

Included:
- R & I front sheet metal and body assembly
- Front and rear suspension parts
- Steering parts and powertrain as assembly
- Brake line disconnect and bleed
- R & I fuel tank and bumper assembly
- Control linkage and electrical wiring

Does Not Include:
- Setup on frame machine and damage diagnosis
- Wheel alignment
- Refinishing, undercoating, sound deadening material, and anticorrosion protection
- Time for pulling

FRONT OR REAR SUSPENSION CROSS MEMBERS

Included:
- Welding as necessary

Does Not Include:
- R & I of all bolted on parts
- Wheel alignment

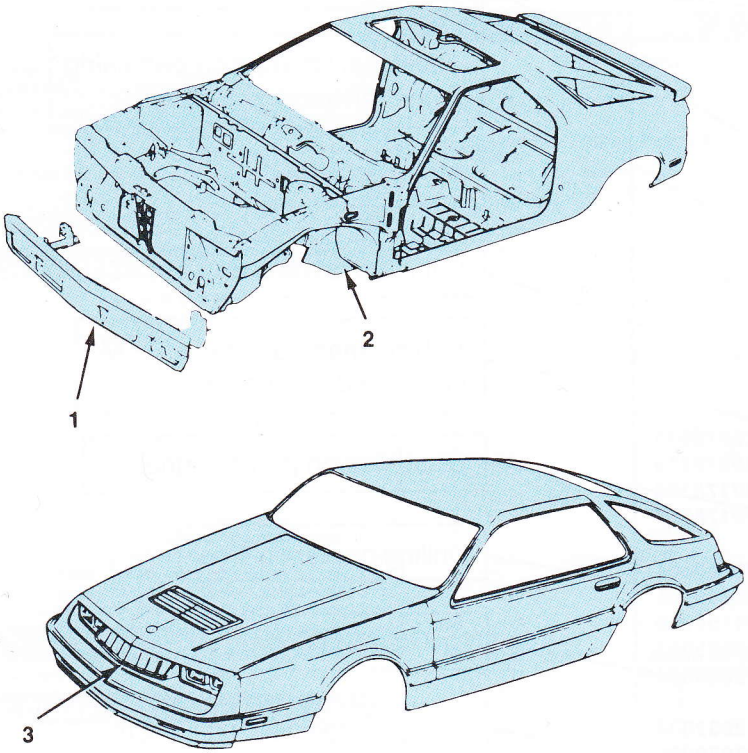

3. GRILLE

Included:
- Grille remove and reinstall
- Lamps (when mounted in grille)
- Standard equipment molding, name plates, and ornamentation

Does Not Include:
- Stripe tape, decals
- Optional molding, name plates, and ornamentation
- Refinishing
- Optional lamps
- Aim headlamps

GRILLE/HEADER PANEL/FASCIA

Included: (unless otherwise noted)
- Grille remove and reinstall
- Lamps
- Alignment to vehicle
- Fillers and extensions

Does Not Include:
- Bumper assembly remove and reinstall
- Refinishing
- Stripe tape, decal, overlays
- Molding, name plates, and ornamentation
- Drill time
- Aim headlamps

FIGURE 10-7 Note how an estimating guide summarizes operations for repairs that are included and those that are not included. Labor time would have to be added for repair operations not included for rusted, frozen parts, moldings, aim headlights, and other labor tasks.

Collision estimating guides can be used as a reference for pricing parts. However, they should never be used to determine the final estimated total. The prices in estimating guides are factory-suggested list prices. Parts that have been discontinued are usually listed and noted with the letter D. The price that appears in the guide is the latest one available at the time of publication.

Each collision estimating guide will have **procedure pages**. Sometimes called *P pages*, these procedure pages provide important information such as:

- Arrangement of material in the guide
- Explanation of symbols used in the guide
- Definitions of terms used in the guide
- How to read and use the parts illustrations
- Procedure explanations, including which operations are included and which are *not* included together (Figure 10–7)
- How discontinued parts information is displayed
- How interchangeable part information is displayed
- Additions to labor times
- Labor times for overlap items
- How to identify structural operations
- How to identify mechanical operations

FRONT FENDER

Use Procedure Explanations 7 and 28 with the following text.

Refinish Fender Outside	R/L	2.2	
Add to Edge Fender	R/L	.5	
Refinish Hinge	R/L	.2	
Refinish Side Moulding	R/L	.2	
R&I Fender Assy	R/L	#1.9	

#Includes Disconnect & Connect Bumper End, R&I/R&R Hood Hinge & Fender Liner, w/Bumper Removed Deduct .2

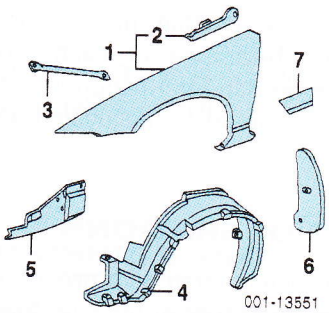

1 **Fender Assy**	R	12455104	#2.1	255.00
	L	12455103	#2.1	255.00

#Includes Disconnect & Connect Bumper End, R&I/R&R Hood Hinge & Fender Liner, w/Bumper Removed Deduct .2

2 **Hinge, Lwr Hood¶**	R/L	10297155-4	.4	5.25
¶Included w/Fender Assy				
3 **Brace, Fender**	R/L	10405868-9	.1	5.20
4 **Liner, Fender**	R/L	10430448-9	.3	31.50
5 **Shield, Splash**	R	10293182	.2	5.60
	L	10285881	.2	5.60
6 **Insulator**	R/L	10407559	#.1	3.80
#w/Fender Liner Removed				
7 **Moulding, Side (Adhesive)**				
Century				
Jasper Green	00 R/L	10425988-9	.2	14.85
Navy Blue	00 R/L	10425982-3	.2	14.85
Sandrift	00 R/L	10425984-5	.2	14.85
Silver	00 R/L	10425980-1	.2	14.85
Toreador Red	00 R/L	10425986-7	.2	14.85
Paint to Match	00 R/L	12532560-1	.2	14.30

FIGURE 10–8 Study how columns in an estimating guide give repair part prices and labor times in hours. For example, how much does the front fender cost and how many hours of labor would you be charged to replace it? *(Courtesy of Mitchell 1)*

Service manuals and estimating guides also contain exploded views of parts. Such illustrations are useful in determining which parts must be replaced during repairs.

When using crash estimating guides, the body technician and painter, as well as the estimator, must be familiar with terms that are commonly used in estimating guides:

- **Remove and install (R&I)** means the item is removed as an assembly, set aside, and later reinstalled and aligned for a proper fit. This is generally done to gain access to another part. For example, "R&I bumper" means that the bumper assembly has to be removed to install a new fender or quarter panel.
- **Remove and replace (R&R)** means to take out the old parts, transfer necessary items to new parts, replace, and align.
- **Overhaul (O/H)** means to remove an assembly from the vehicle; disassemble, clean, inspect, and replace parts as needed; then reassemble, install, and adjust (except wheel and suspension alignment). O/H time should be used only if the time for repairing the individual parts (less overlap) is more than the overhaul time.

Looking at Figure 10–8, how many hours of labor are listed to R&R and refinish the front fender?

Appendix B in this textbook lists other terms that are accepted by most estimating guide publishers and estimators when filling out written forms. Chapter 3 also introduced basic shop abbreviations.

10.2 PART PRICES

Once the vehicle is judged repairable, the next decision is whether the collision damage requires new parts or the repair and straightening of existing parts. The estimator must have the ability to compare the cost of repairs against the cost of new parts or units.

As a rule of thumb, repair costs should never exceed replacement costs. If there is some doubt that repairs and straightening will not produce a quality job, then new parts should be used. Remember, sheet metal parts usually offer the most opportunities for repair and straightening. As a result, sheet metal repairs, replacement, and refinishing of panels generally account for the largest number of estimate dollars.

New parts are manufactured by the auto maker or an aftermarket company. They are usually more expensive than used parts and sometimes require more time to prepare them for installation and painting. New parts often do not have the factory undercoating and corrosion protection of a salvage part.

To reduce parts costs, many insurance appraisers and some customers might want the body shop to use salvage parts. **Salvage parts** are used parts in good condition that were removed from totally wrecked vehicles by salvage yards.

Some customers might object to used parts in their repaired car. Inform them that used parts might be preferable to new parts. Explain that new parts do not always have

SHOP TALK

Remember that salvage parts could have been previously damaged and repaired. For this reason, carefully inspect all salvage parts before they are installed to be sure that they are structurally sound.

factory corrosion protection and that factory rust protection is difficult and time-consuming to match in the shop.

Many salvage yard dealers offer a free computer parts location service. They use shortwave radio or computer messaging to request your needed parts from salvage yards all over the country.

Each damaged car poses different problems that must be answered to arrive at a repair versus replacement decision. The most numerous and difficult questions arise from major collision wreckage.

For example, let us say that you are estimating a car with a "hard hit" in the right front. You might have to decide whether to install a partial or complete right, front, frame rail. Do you want to section the damaged rail and splice on a partial front-half section? Or should you remove and replace the complete rail? Which would save time and money while still producing a solid structural repair? These kinds of questions take time and thought to answer. Therefore, you must know correct repair procedures to write an estimate properly.

Generally, clues to body distortion (twist, sag, or side sway) are apparent if any cracking of stationary glass (windshields/back window) is noted. **Stress cracks** indicate minor panel damage and movement. Always use a shop light to look around affected areas to find stress cracks between panel joints. Sealer and undercoating cracks offer hints of damage.

In some situations, such as a severely damaged front end, an estimator might want to consider a complete front clip. The **front clip assembly** generally includes all body parts from the front bumper to the rear of the fenders.

Part prices given in estimating guides usually do not include the cost of state and local taxes; shipping from the supplier; items such as bolts, rivets, screws, nuts, washers, clips, and fasteners; body repair materials; and refinishing costs, unless otherwise noted. These costs must be added to the estimate.

Once the part prices, material costs, and repair time have been determined, they can be entered into the estimate.

10.3 LABOR COSTS

The **flat rate** is a preset amount of time and money charged for a specific repair operation. Estimating guides provide an explanation of what the flat rate labor time includes and does not include. For example, replacing a panel or fender includes transfer of the part attached to the panel. It does not include the installation of moldings, antennas, refinishing, pin striping, decals, or other accessory parts. Also, it does not consider rusted bolts, undercoating, and alignment or straightening of damaged adjacent parts or bolts. You should add a nominal amount of time to cover these types of unwritten repair operations.

The flat rate labor time reported in collision damage manuals should be used *only* as a guide. It is based primarily on data reported by vehicle manufacturers who have arrived at these estimates by repeated performance of each operation under normal shop conditions. Estimating guides usually provide an explanation of the established requirements for the average mechanic, working under average conditions, and following procedures outlined in their service manuals.

The labor times do not apply to cars with equipment other than that supplied by the car manufacturer as standard or regular production options. If other equipment is used (body spoilers, ground effects, etc.), the time must be increased to compensate for these added variables.

JOB OVERLAP

Job overlap means that replacement of one part duplicates some labor operations required to replace an adjacent or attached part. With job overlap, reductions in an estimating guide's flat rate labor times must be considered. For example, when replacing a quarter panel and a rear body panel on the same vehicle, the area where these two components join is considered overlap. Where a labor overlap condition exists, less time is required to replace adjoining components collectively than is required when they are replaced individually.

Overlap labor estimating information is generally included at the beginning of each group. In those instances where overlap information is not given, appropriate allowances should be negotiated after an on-the-spot evaluation.

INCLUDED OPERATIONS

Another labor cost reduction is known as included operations. **Included operations** are jobs that can be performed individually but are also part of another operation. For example, the suggested time for replacing a door includes the replacement of all parts attached to the door. Unless a salvage door is used, it would be impossible to replace the new door without transferring these parts. Consequently, the time involved to transfer these parts is considered "included operations" and is disregarded. This is because the times for the individual items are already included in the door replacement time.

An experienced estimator will not overlook the removal of exterior trim and body sheet metal hardware. These parts must often be removed prior to repair or painting operations. They must then be replaced after these operations.

Once all the repairs and labor times have been entered on the estimate, the computer will total your figures for you. If you do not have computerized estimating, it is necessary to

refer to a conversion table. A conversion table can be used to convert flat rate labor time into dollars to fit local hourly labor or operating rates. With a computer estimating system, this form is built into the software and is calculated automatically.

When establishing flat labor rates, shop overhead (including such items as rent, management and supervision, supplies, and depreciation on equipment) must be determined. Then the actual labor cost of all employees (including office help) and the profit required to keep the business operating must be added to the shop overhead to obtain a dollar flat rate for repairs. This flat rate cost is usually figured on an hourly basis.

Labor times shown in all collision estimating guides are listed in hours and tenths of an hour. If a vehicle requires a new right front fender, a new wheel opening molding, and a new name plate ornament, the total labor replacement time, according to a leading estimating guide, is:

Front right fender	3.0 hours
Wheel opening molding	0.2 hours
Installation of nameplate	0.2 hours
Total labor	3.4 hours

If the shop's dollar per hour operating rate is $25.00, the total estimated labor cost would be $87.50. When the labor costs are determined, they are written on the estimate form.

On the whole, flat rate operations comprise all work in which components must be removed and replaced. Estimated work is work done to straighten and/or repair body members. However, it is not always that simple. Sometimes there are combinations. A good example of this is when body members must first be straightened before cutting them off to make sure the new member will line up prior to welding. This operation, even though it is a flat rate R&R, must have some additional estimated time added to the total time for the procedure.

10.4 REFINISHING TIME

Making a correct estimate of the amount of labor time required to refinish panels, doors, hoods, and so on is a vital part of an estimator's job function. Although the wide range of materials and conditions sometimes makes it difficult to arrive at a precise refinishing cost, there are a number of generally approved concepts that will help you arrive at a fair judgment of the amount of materials that will be needed for the job.

Flat rate manuals published by vehicle manufacturers list a labor time plus a materials allowance (in dollars) for a multitude of individual paint operations. However, independently published estimating guides and collision damage manuals list paint labor times but not the dollar value of the materials required.

In some estimating guides, the time required for painting is shown in the parentheses adjacent to the part name. The basic colorcoat application generally includes:

- Clean panel/light sanding
- Mask adjacent panels
- Prime/scuff sand
- Final sand/clean
- Mix paint/load sprayer
- Apply colorcoat
- Remove masking
- Clean equipment

The basic colorcoat application generally does *not* include:

- Cost of paints or materials
- Matching and/or tinting color
- Grinding, filling, and smoothing welded seams
- Blending into adjacent panels
- Removal of protective coatings
- Spatter paint
- Custom painting
- Undercoating
- Anticorrosion materials
- Sound-deadening materials
- Edging panel
- Underside of hood or trunk lids
- Covering entire vehicle prior to refinishing if necessary
- Protective coatings
- Additional time to produce custom, non-OEM finishes

Painting times given in most estimates are for one color on new replacement parts' outer surfaces *only*. Additions to paint times are usually made for the following operations:

- Underside of hood — Add 0.6
- Underside of trunk lid — Add 0.6
- Edging new part
  1. First panel — Add 0.5
  2. Each additional — Add 0.3
- Anticorrosion coating — Add 0.3
- Two-tone operations (unless otherwise specified in text)
  1. First panel — Add 0.6
  2. Each adjacent — Add 0.4
- Stone chip (protective material)
  1. First panel — Add 0.5
  2. Each additional — Add 0.3
- Clearcoat (basecoat/clearcoat) after deduction for overlap
  1. First major panel — Add 50%
  2. Each additional — Add 25%

Reductions to paint times can be considered for the following:

- Overlap (adjacent parts)
  1. First major panel — Full time
  2. Each additional (except extensions) — Deduct 0.4
  3. Extensions — Deduct 0.2
- Overlap (nonadjacent parts)
  1. First major panel — Full time
  2. Each additional — Deduct 0.2

Use this column for paint color with included materials when no clearcoat is required.

Use this column for paint base, pearl, clear, and included materials when three stage is used.

Estimated paint hours in half-hour increments.

Use this column for paint color with included materials when clearcoat is required.

Suggested Cost (Dollars)

Estimated Refinish Hours	Color	Color & Clear	Three Stage	Estimated Refinish Hours	Color	Color & Clear	Three Stage
0.0-1.0	$ 25.55	$ 31.09	$ 38.02	20.1-20.5	$ 373.76	$542.73	$681.31
1.1-1.5	35.57	44.57	54.96	20.6-21.0	383.78	556.90	698.95
1.6-2.0	46.85	57.93	71.78	21.1-21.5	391.55	568.84	714.34
2.1-2.5	55.63	70.87	88.19	21.6-22.0	399.33	580.77	729.74
2.6-3.0	65.87	85.61	[illegible]	[illegible]	407.11	592.70	[illegible]
18.6-19.0	350.50	507.01	619.84	37.6-38.0	[illegible]	[illegible]	1229.29
19.1-19.5	358.25	518.92	635.19	38.1-38.5	669.41	983.12	1244.69
19.6-20.0	365.98	530.80	650.57	38.6-39.0	677.19	995.05	1260.08
			665.92	39.1-39.5	684.97	1006.99	1275.48

ADDITIONAL MATERIAL COSTS FOR BLENDING ADJACENT PANEL
Add according to procedure on page P-4

Hours	Cost	Hours	Cost	Hours	Cost
0.0-1.0	$ 15.73	3.1-3.5	$ 55.09	5.6-6.0	$ 97.67
1.1-1.5	20.99	3.6-4.0	63.04	6.1-6.5	105.28
1.6-2.0	28.86	4.1-4.5	70.92	6.6-7.0	112.81
2.1-2.5	36.24	4.6-5.0	82.25	7.1-7.5	123.80
2.6-3.0	47.94	5.1-5.5	90.00	7.6-8.0	131.19

NOTE: Additional material may be required for special circumstances.

Use this chart when calculating blending materials according to explanation on P-4.

FIGURE 10–9 This chart lets you add correct costs for different types of refinish materials. Three-stage refinish materials cost more than single-stage paint. *(Courtesy of Mitchell 1)*

The labor allowance given in a collision estimating guide does not include any material costs. These must be estimated using a locally compiled refinishing materials list or one that is accepted on a national or regional basis.

The use of a guide permits shop owners and estimators to place a fair evaluation on the refinish materials actually used. Figure 10–9 shows a table for tabulating repair times for single-stage, two-stage, and three-stage paints.

10.5 ESTIMATE TOTAL

Once all cost information is entered (parts, labor, and materials), the amounts can be added together for a subtotal. To this figure, the estimator adds any extra charges, such as wrecker and towing charges, storage fees, and state/local taxes. These figures, added to the subtotal, compose the grand total estimate of the repair (Figure 10–10).

While more and more larger body shops are doing repair jobs such as wheel alignment, rustproofing, and tire replacement, smaller shops still "farm out" or "sublet" these jobs to others. When this is done, the specialty shop bills the body shop for the work. Shops that farm out work usually have a column—Sublet—where the retail labor cost is marked. This sublet figure is added to others to obtain the grand total of the estimate.

If the owner wants to have "extra" work performed (damage that occurred prior to the collision), this should be noted as "customer requested (C/R)" repairs. Insurance

B&J

Collision Estimating Services

ESTIMATE OF REPAIRS
№ 002128

SHEET NO. 1 OF 1 SHEETS

NAME	ADDRESS	PHONE	DATE
KAREN Miller	1143 RAILROAD ST. CRESSONA, PA. 17929	HOME 395-2719 BUS. 623 7347	12-17-00

YEAR	MAKE	MODEL	LICENSE NO.	MILEAGE	SERIAL/ V.I. NO.
2000	ford	P.V.	MAE 917	14864	1FTDF15Y5GNA69994

INSURANCE COMPANY	TYPE OF INSURANCE	ADJUSTER	PHONE	CAR LOCATED AT
Amerisure	COL			mfg. 4/95

PARTS NECESSARY AND ESTIMATE OF LABOR REQUIRED	PAINT COST ESTIMATE		PARTS COST ESTIMATE		LABOR COST ESTIMATE	
O FRONT FACE BAR Chrome NO gds OR PADS			205	82		.5
O " STONE deflector	1	0	40	50		.5
O Left HeadLamp door (with argent GRILL)			52	32		2
O " " Shield			3	20		
O " FRONT fender	3	1	133	00	1	6
O " " " APRON			60	47	1	0
③ Wheels 15" 55.60 ea.			111	20		6
③ Stems and Balance			2	50		5
③ HUB CAPS			43	46	—	
RePAIR RADIATOR Support			—		2	0
ALign FRONT End			—		1	5
O Left door trim Panel			73	40		
STRIPE Left FRONT fender			15	00		.5
LABOR 25.0 HRS @ 23.00			575	00		
(note MAY BE FRONT SUSPENSION damage)						
PAINT MAT.			89	10		
UNDERCOAT			15	00		
TOTALS			1,419	.97		

INSURED PAYS $_____ INS. CO. PAYS $_____ R. O. NO._____

INS. CHECK PAYABLE TO_____

The above is an estimate, based on our inspection, and does not cover additional parts or labor which may be required after the work has been opened up. Occasionally, after work has started, worn, broken or damaged parts are discovered which are not evident on first inspection. Quotations on parts and labor are current and subject to change. Not responsible for any delays caused by unavailability of parts or delays in parts shipment by supplier or transporter.

ESTIMATOR _____

AUTHORIZATION FOR REPAIRS. You are hereby authorized to make the above specified repairs to the car described herein.

SIGNED X DATE 19

GRAND TOTAL	1,419.97
TOWING & STORAGE	
TAX	85.20
TOTAL OF ESTIMATE	$ 1,505.17

FIGURE 10–10 This is an example of a handwritten damage estimate or damage appraisal for parts and labor. Note the columns for tabulating paint costs, parts costs, and labor costs.

companies will not pay for customer requested repairs not a result of the wreck. A separate estimate for these extra repairs must be made for the customer.

From the estimate, a work order can be written for the technician who is going to repair the damaged vehicle.

When working with any estimating system, either manual or computer, those working with the damage report must understand:

- Where vehicle options are listed, so these can be double-checked for accuracy
- Which labor rates are shown for a given operation and how to identify them
- Which times and amounts are judgment items and how these were generated
- Which times and amounts have been overridden
- Which times are included and which are not

Only by understanding all of these can a judgment be made on whether the damage report is accurate. Each system will produce a unique look.

10.6 COMPUTER ESTIMATING

Computer-based estimating systems using a personal computer (PC) provide more accurate and consistent damage reports. The use of computers makes dealing with thousands of parts on hundreds of vehicles more manageable. Computer estimating is easier than writing an estimate manually (Figure 10–11).

Estimating programs provide comprehensive parts data and labor times for the collision repair industry. Most body shop repair programs are Microsoft Windows®–based and are used on IBM-compatible PCs. Estimating programs are organized just like collision estimating guides and are based on a comprehensive database of parts and labor information.

Estimating software can also help save time on searching for parts. Estimating software automatically narrows the qualified parts selection range to the specific vehicle displayed. Comprehensive VIN decoding (right down to the drivetrain information) helps the estimator select the right parts for the right car.

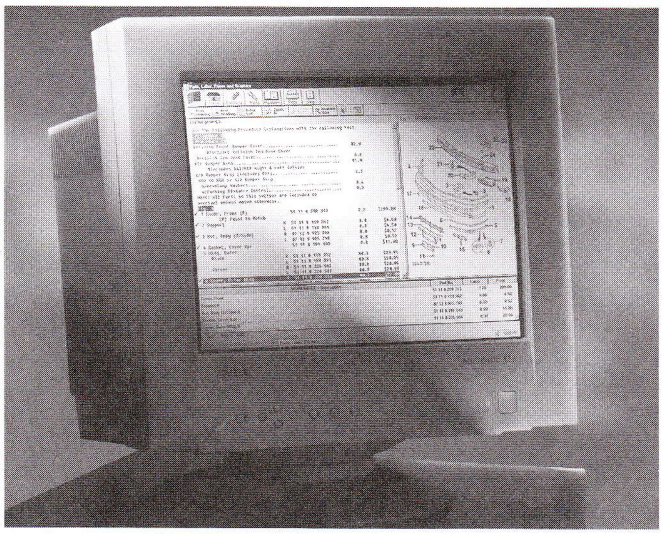

FIGURE 10–11 Most collision repair shops are now computer based to streamline and speed the estimating process. *(Courtesy of Mitchell 1)*

Estimating software makes it easy to prepare estimates while interacting with on-screen parts graphics. You simply "point and click" on the description or graphic of the part that needs repair or replacement, the database is automatically accessed for the part, and then it is calculated into your estimate.

The part lister displays the information contained within the collision estimating software, including important part and labor information notes, in the same front-to-rear sequence as the guide. Part price and new vehicle updates are provided regularly by software publishers.

Estimating software takes care of important details, such as refinishing parts and accounting for additional labor on optional equipment. Estimating software guides you through the estimating process to help present your customer with a clean, professional estimate in just minutes.

Estimating software handles complex calculations and procedures, which means fewer supplements and additions. It virtually eliminates the math and logic errors sometimes found in handwritten estimates.

Computer-based estimating systems store the collision estimating guide information in a computer. This eliminates a lot of time in looking up parts and labor times and manually entering and totaling them on a form. The computer prepares a damage report while still allowing the possibility of a manual override when necessary.

Computerized estimating and shop management systems are being used by an ever increasing number of body shops. Regardless of size, body shops face concerns that demand increased efficiency and speed. A dramatic increase in the number of vehicle makes and models has led to a tremendous increase in essential repair information. Part numbers, part prices, and repair times are constantly updated and changed. Calculating the needed costs for repairs is now more complicated than ever. Damage report writing, accounting, job costing, time and inventory control, and business analysis can all be performed more quickly and easily using a computer.

COMPUTER COMPONENTS AND JARGON

A computer is an electronic device for storing and manipulating information. The computer is simply a machine that helps people use large databases of information.

Like an automobile, the computer is made up of various systems and components. *Computer input devices* are items such as the keyboard or bar code reader that allow you to put information into the computer. *Output devices* are items such as cathode ray tubes (CRTs) or monitors and printers that allow you to read information inside the computer.

An awareness of computer jargon is essential to understanding the computer. The following is a list of definitions

to acquaint the damage report writer with computer terminology, increase an understanding of the computer, and serve as a reference guide.

Central processing unit (CPU) The portion of the computer that directs the sequence of operations by electrical signals and governs the actions of the units that make up the computer. The CPU is the "computer brain" where calculations take place.

Command An instruction to the computer to perform a predefined operation. It can be given by typing on the keyboard or installing data from another device.

Compact disc (CD) A disc that stores optical data instead of magnetic data. It can hold several times the information of a floppy. A CD is a "read-only" disc. You cannot erase or alter data on a CD.

Cursor A movable, blinking marker or pointer on the monitor screen that shows where the next point of entry or change will be made.

Drive A device that holds a disk, cassette tape, or CD so that the computer can read data from and write data onto it.

Erase To remove information or data from memory or from disc storage.

Floppy disk A thin magnetic disk (in protective paper or plastic jacket) that stores data or programs. It is erasable and reusable and comes in several sizes. They are often used to back up data in case the information is lost on the main hard drive.

Hard disk A device, usually inside the computer, to store large amounts of data magnetically. Unlike a floppy disk, it is rigid and not readily interchangeable but can store and retrieve data faster than a floppy.

Hardware The physical parts of a computer, such as the keyboard, mouse, screen, disk drives, printer, and so on.

Laptop computer A small portable computer with a flat display screen for working in remote locations (Figure 10–12). Also called a notebook computer.

Mainframe computer A powerful computer capable of storing and processing extremely large amounts of data. Also called the "host" computer in some systems.

Memory Computer chips that hold information electronically. This information is lost when the computer is shut off, unless the information is "saved" to make it permanent.

Menu A displayed list of options from which the user selects an action to be performed.

Modem A device for sending computer data over phone lines for use by another computer at a remote location.

Monitor The computer screen for viewing information.

Peripherals Hardware that can be added to a basic computer, such as a printer, disk drive, CD drive, or modem.

Program Disc information that loads into memory to allow the computer to do a specific task.

Save To write data from memory to disc for permanent storage.

FIGURE 10-12 This advanced estimating system uses a special laptop computer with a touch screen to input data about vehicle damage. *(Courtesy of Mitchell 1)*

Software Instructions written in a computer language that tell the computer what the user wants to do. Smaller programs come on floppy disks. Larger, more complex programs come on a CD. Also known as programs.

System software Disc information that allows the computer to start up and operate.

NOTE *For more information on computer systems used in a body shop, refer back to Chapter 3 on Service Information.*

TYPES OF COMPUTER ESTIMATING SYSTEMS

Computers are revolutionizing the art of estimating by making enormous amounts of data readily accessible and user-friendly. There are basically two types of computer estimating systems: dial-up systems and resident, or in-shop, systems.

The *dial-up estimating system* relies on data stored in a mainframe computer at a remote location. The data in the mainframe is usually accessed over the Internet via a modem. The shop may be charged a fee whenever data from the mainframe is accessed.

An *in-shop estimating system* has all of the data needed at the shop office, usually on CDs. The system does not require a fee for each estimate. However, the shop must purchase current CDs or subscribe and pay an annual fee to get updated CDs. Modern computer estimating systems store an electronic database containing up-to-date part

Modern service software will help select the lowest cost parts available from the selected suppliers. The suppliers and parts information prints at or near the bottom of the estimate, detailing the supplier's address, phone number, and part number and price.

Salvage parts software provides easy access to a user-customized database of recycled parts and suppliers in North America. This type of computer program often supports an on-line accessible parts database from a growing network of thousands of recyclers. Salvage parts software allows you to quickly search and find quality recycled parts. You can then include them on the electronic estimate.

The salvage parts database is often supplied by the Automotive Recyclers Services Corporation. With some software, these recyclers update their inventory of replacement parts into the shop's Internet server. Salvage parts software can be set to automatically download on a predetermined schedule, every day if desired. The shop's computer hard drive will then have an information database on recycled parts. Having the most current recycled parts inventory available ensures you will quickly find the part you want at the price listed.

AUTOMATIC OVERLAP DEDUCTION

Most estimating programs automatically deduct for overlap. The program notes operations as included if they are part of a larger operation. The program may also identify judgment times.

Labor time information for a given operation is taken from the same sources as in the collision estimating guides.

10.8 ESTIMATING SEQUENCE

When estimating any type of damage to a vehicle, whether minor or major, a logical sequence must be followed. For an estimate to clearly establish a true cost of repairs, a thorough damage analysis must be performed on the wrecked vehicle.

Before making a written estimate, the estimator should make a visual inspection of the entire vehicle, paying special attention to damaged subassemblies and parts that are mounted to (or part of) a damaged component. The estimator must consider basically the same points as the technician does before making any decision on the repair work. That is, most estimators start from the outside of the car and work inward, listing everything—by car section—that is found bent, broken, crushed, or missing.

SHOP TALK

The estimator should develop a basic pattern or system for analyzing damage. This pattern should be used on every vehicle to prevent missed parts or overlooked problems.

FIGURE 10–14 When analyzing damage to a vehicle, look for uneven gaps around doors and panels. They indicate major movement of body parts from collision impact that would add to repair costs.

TYPES OF DAMAGE

When writing an estimate, the following are some of the conditions to look for:

- Direct outer body damage starting at point(s) of impact
- Improper fit of doors and movable panels (Figure 10–14), which shows major movement of body panels
- Hidden structural damage under outer body panels
- Cracked sealer and undercoating, which indicate structural damage
- Indirect damage from shock waves traveling through body parts
- Mechanical damage to engine parts, steering and suspension parts, and the drivetrain
- Damage to interior of vehicle, air bag deployment or dash damage, for example
- Bent wheels and damaged tires
- Broken glass and mirrors

As an example, if the front grille and some of the related parts are damaged, the repairs or replacements needed would be listed as follows:

Front Grille ..... Replace
Front Grille ..... Refinish
Opening Panel ..... Replace
Deflector (or Valance Panel) .... Replace
Headlamp Door ..... Replace
Grille Opening Panel ..... Refinish

Notice that the parts to be repaired, straightened, replaced, or refinished are listed in a definite sequence according to factory disassembly operations or exploded views as provided in shop manuals or crash estimating guides.

You must find all damage, no matter how minor (Figure 10–15). After noting obvious exterior damage, look for hidden damage. Doors out of alignment and cracked stationary glass are often a solid clue to hidden damage to the frame or underbody structure. If applicable, open the hood and check in the engine compartment for damage (Figure 10–16).

Look for cracked sealer or undercoating, which indicates the metal panels have been pushed out of alignment (Figure 10–17).

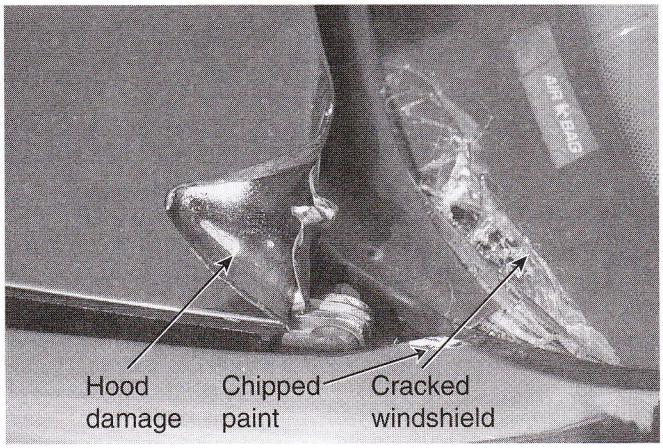

FIGURE 10–15 Frontal impact has forced the rear of the hood into the windshield. Also, note the chipped paint on the front fender. All three of these parts would have to be replaced or repaired and included on the estimate.

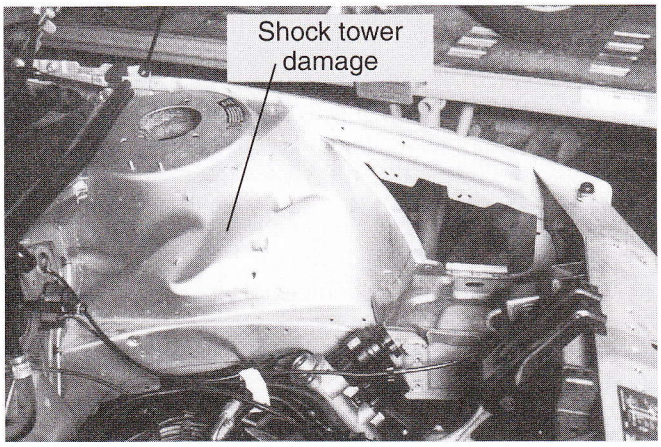

FIGURE 10–16 Damage to hidden or partially hidden inner panels can be more difficult to find and repair than outer body panels. Keep this in mind when doing estimates. *(Courtesy of Tech-Cor)*

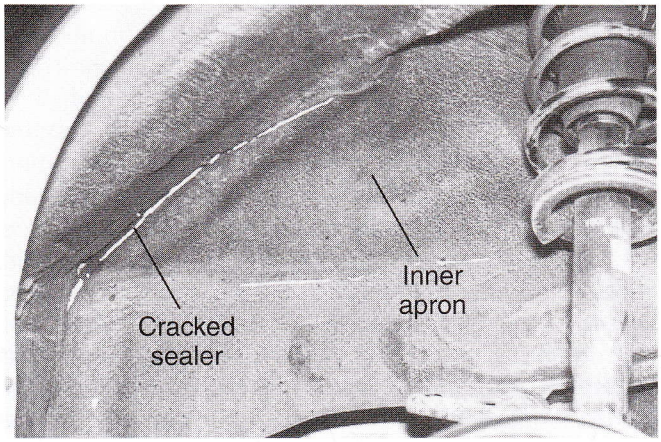

FIGURE 10–17 Cracked sealer and undercoating is an indicator of serious damage. Measurements would be needed to evaluate the extent of damage to be included on the estimate. *(Courtesy of Tech-Cor)*

FIND INDIRECT DAMAGE

The estimator must be on constant guard against accidentally missing related damage. Damage that happens to a vehicle during the moment of impact or immediately after impact is referred to as related or *indirect damage*.

Often, in the case of unibody cars, related damage is not near the area of impact but some distance away. Buckles in large panels like the roof and quarter panels are often indirect damage. Always look for indirect damage when writing an estimate (Figure 10–18).

Hidden or secondary damage, as stressed many times in this book, can occur almost anywhere or to any part or component on a car that has been involved in a collision. For example, the snout of an engine crankshaft can snap from frontal impact forces. Badly damaged fan blades and pulleys can clue you in to a damaged engine water pump. Check for coolant, oil, and other fluid leakage. This would indicate ruptured hoses, lines, or physical damage to fluid reservoirs (Figure 10–19).

Transmission cooler lines running from the engine radiator to the automatic transmission case might have become crushed or pinched. Steering linkage might have become bent and yet, because of its unusual configuration, misalignment can be difficult to detect at first glance.

Radiators are commonly damaged in front collisions. Always check for smashed radiator fins or a leaking radiator when estimating damage to the front of a vehicle (Figure 10–20).

Front motor mounts can be sheared even though the engine resettles back into position, hiding this type of damage. Castings of the engine, transmission, or bell housing may crack, leaving only a hairline fracture that is difficult to detect even on close examination.

Leaf springs can crack and be hard to spot, or the parking pawl, located inside the automatic transmission, may have snapped in two if the car was hit with the shift lever in the park position.

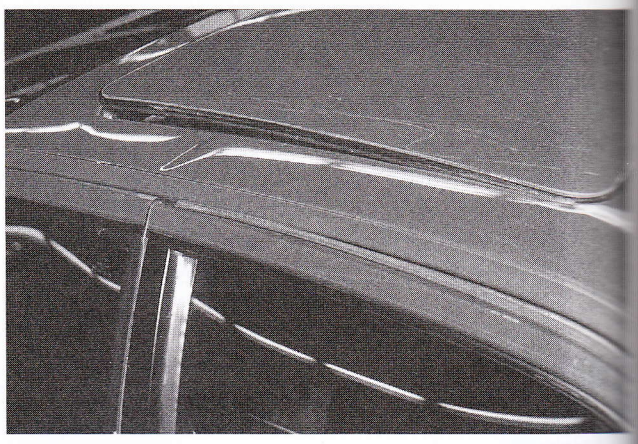

FIGURE 10–18 Indirect damage is common with today's unibody vehicles. Impact force can travel through the body structure and buckle panels at the other end of a vehicle. Large panels, such as roof and quarter panels, often suffer indirect damage. Note the small buckle in this roof panel that resulted from a head-on collision to the front bumper. *(Courtesy of Tech-Cor)*

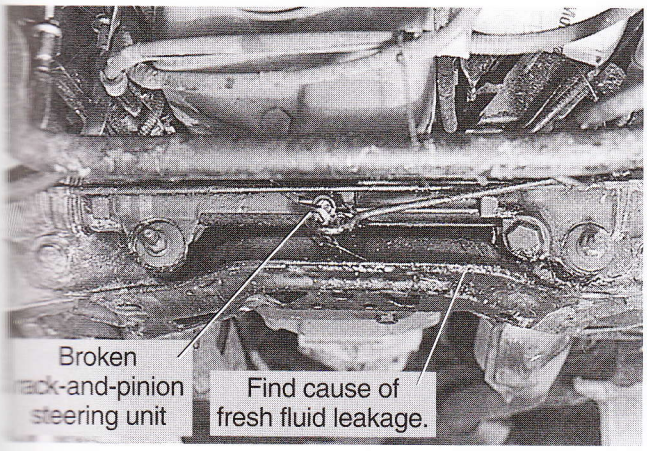

FIGURE 10–19 Engine parts, such as pulleys, motor mounts, and manifolds, are often damaged with a hard hit. Trace any fluid leakage to its source: radiator, hoses, power steering, brake lines, and so on. When inspecting under a vehicle, also check the steering and suspension for damage. This rack-and-pinion assembly was broken during a wreck and would require expensive replacement. *(Courtesy of Tech-Cor)*

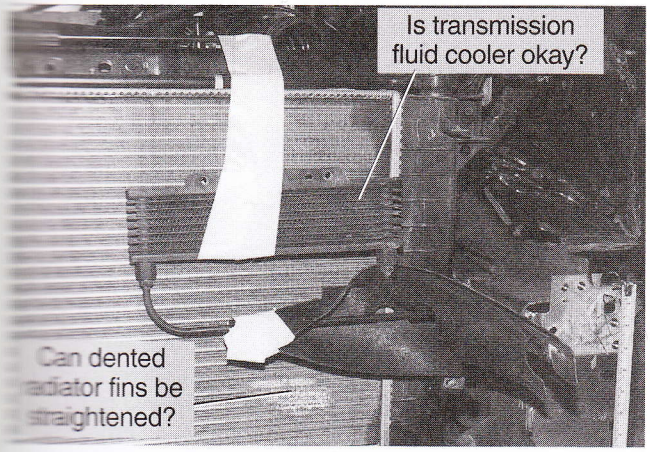

FIGURE 10–20 Oil coolers and radiators are commonly damaged in front collisions. Note how the fins have been bent on this radiator. If the radiator core is not ruptured, you can straighten the fins to repair the radiator. Time would have to be added for repairing or replacing such parts.

FINDING FRAME DAMAGE

The estimator must look for buckles in frame members. Search for bolts, flat washers, or other types of fasteners that have moved or shifted out of position, leaving unpainted, bare, or shiny metal showing. Also look for discolored, cracked, or fractured undercoating underneath the body structure. Check crush zones on the frame rails for buckles and signs of major frame rail damage, which would add considerable cost to the repairs.

INSPECT ON LIFT

With major damage, it is best to raise the vehicle on a lift so you can inspect under the vehicle. This will let you check frame rails, cross members, and other underbody components more closely.

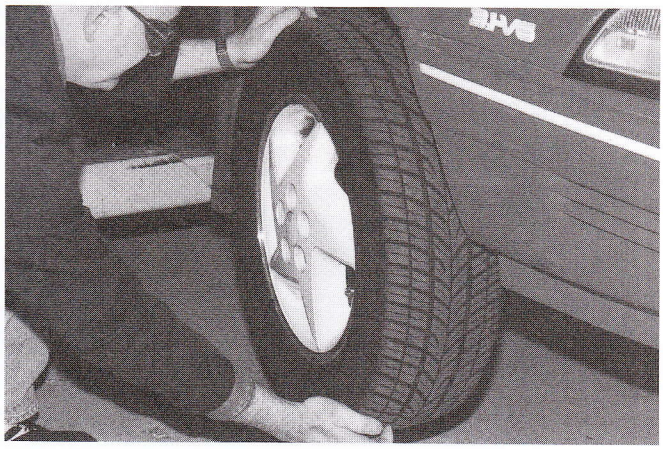

FIGURE 10–21 Inspect wheels and tires closely for damage. Aluminum wheels are very susceptible to damage. Check the inside and outside of the wheel lips and tire sidewalls. If a wheel is badly damaged, the tire probably has cut and damaged internal cords and should be replaced.

Always inspect the inside and outside lips of wheels for cracks and damage. New wheels should be added to the estimate if needed. Tires should also be closely inspectioned on both the outside and inside of the sidewall. If the estimator finds extensive or deep cuts, the tire is unsafe. A new tire must be listed in the estimate. Rotate any suspect wheels to make sure that they are not bent (Figure 10–21).

Sometimes, wheel damage occurs and yet the tire looks undamaged. Keep in mind that an impact that damaged a wheel will often cut cords inside the tire. This will cause tire runout and vibration when returned to service. In such instances, have someone dismount the tire and make an inspection of the inner surfaces.

Figure 10–22 shows some of the chassis parts that are often damaged in major collisions.

During your inspection of vehicle damage, also look at and include damaged wiring harnesses in your estimate. Wires are often cut and smashed during a major collision (Figure 10–23).

PASSENGER COMPARTMENT DAMAGE

The interior of the vehicle must also be checked closely for damage to be repaired. In modern vehicles, air bags commonly deploy from the steering wheel, dash, seats, or door panels. Air bag deployment can damage parts such as the windshield or trim pieces (Figure 10–24).

DAMAGE EXAMPLES

Figure 10–25 shows a car damaged from a rear end hit. Note which parts could have to be replaced.

In a car that suffered a side hit, the side glass, quarter panel, trim pieces, and other parts would have to be included for replacement on an estimate.

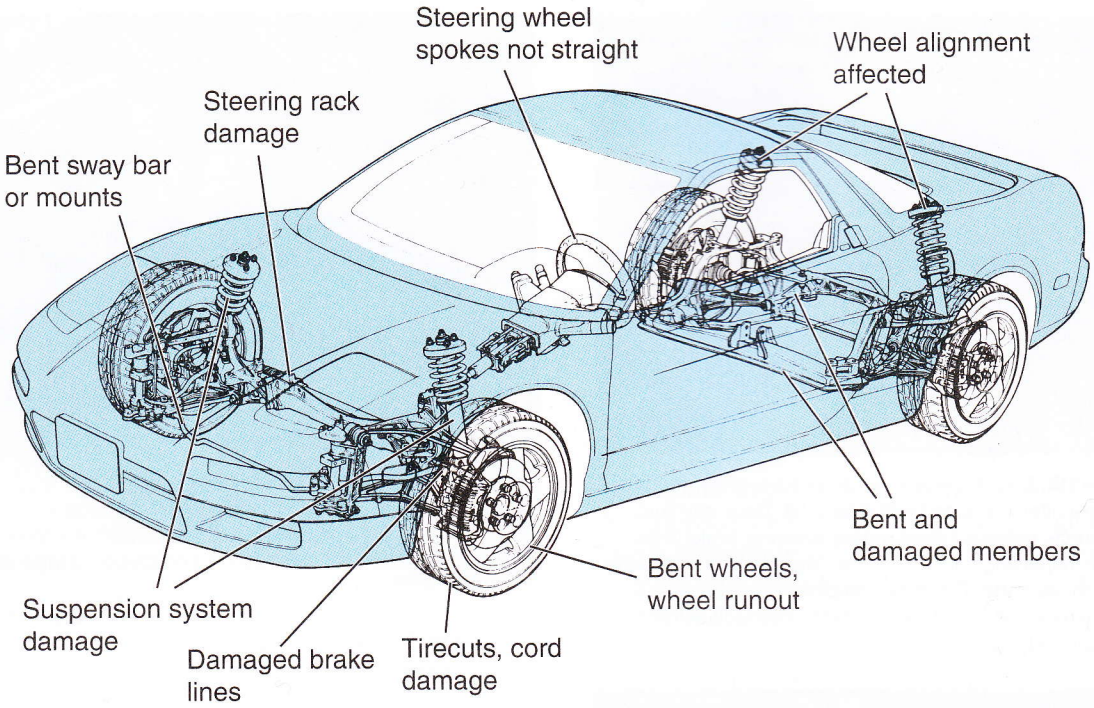

FIGURE 10-22 Note the types of damage that often happen to suspension, brake, and steering systems. *(Courtesy of American Honda Motor Co., Inc.)*

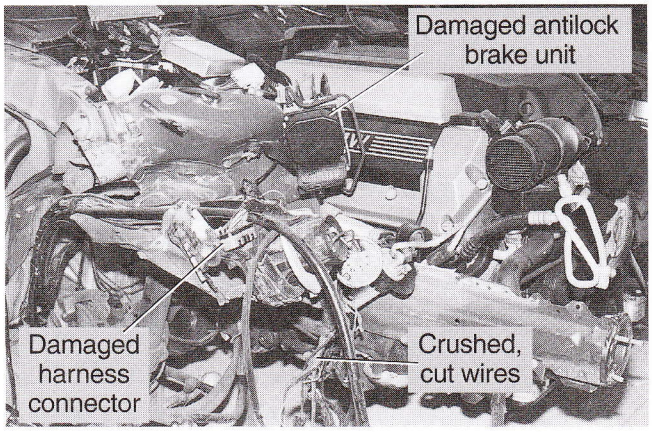

FIGURE 10-23 With major structural damage to a vehicle, wiring harnesses are often damaged. The cost of purchasing and installing new wiring harnesses would have to be added to the estimate.

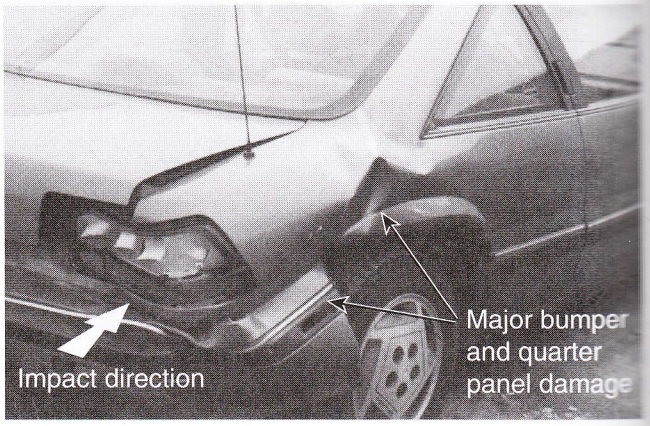

FIGURE 10-25 A rear hit caused major damage to a quarter panel and bumper. What other parts might have to be repaired or replaced?

FIGURE 10-24 The vehicle's interior or passenger compartment is another area that can be costly to fix after a bad accident. Air bags, the dash panel, seats, glass, and carpets can all be damaged by flying bodies and air bag deployment.

MEASURING DAMAGE DURING ESTIMATING

As mentioned, severe collisions from any direction often cause the frame or unitized body to distort. With today's auto construction, the "eyeballing" technique is not enough to detect frame misalignment. It is far better to use measuring equipment (Figure 10–26) to check for misalignment. However, unless the estimator is thoroughly skilled in this area of estimating, it is wise to consult with a frame/body technician for an appraisal to determine the labor time necessary to get the frame back into proper alignment.

To evaluate major damage, you might need to print out vehicle dimension specifications. This would let you use

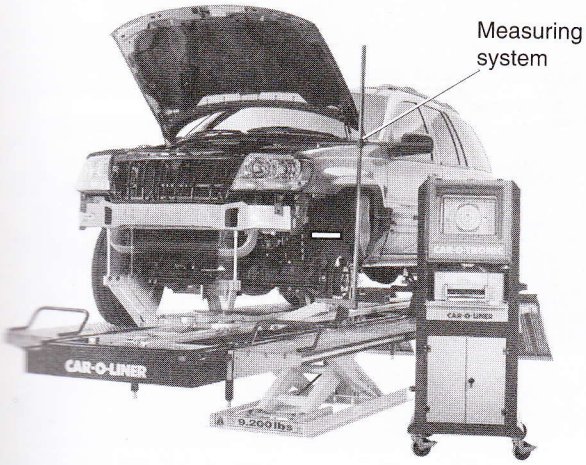

FIGURE 10-26 Inspections of major damage are often done on a lift or bench, which can help you more easily measure damage and inspect under the vehicle. *(Courtesy of Car-O-Liner Company)*

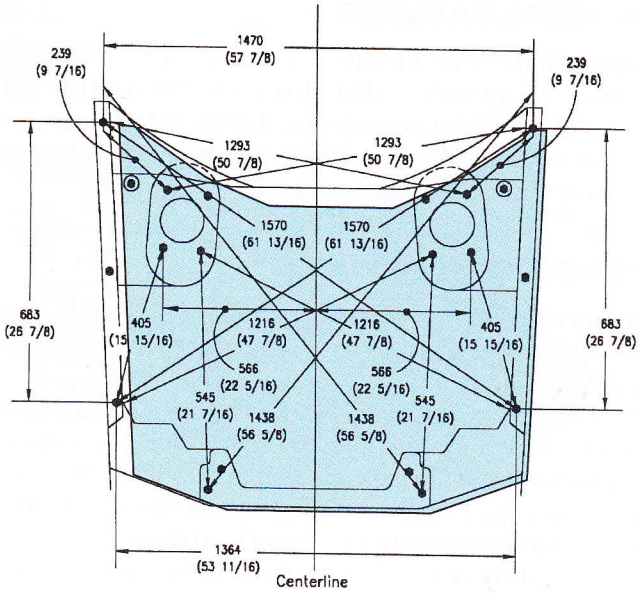

FIGURE 10-27 With major structural damage, a technician will often measure vehicle damage to help the estimator calculate repair costs. With a computerized estimating system, you can quickly pull up vehicle dimensions so they can be measured and compared to specs. This lets you know if frame straightening costs must be added to the estimate. *(Courtesy of Mitchell 1)*

the shop's measuring equipment to precisely determine the extent of the structural damage. Look at Figure 10–27.

After gathering all of the damage information, you can use the computer estimating system to print out the damage report (Figure 10–28).

```
DAMAGE REPORT                                          JAMES
02/17/98 at 11:34                                      D.R. 34942-0003600
                                                       Est: R. GLEASON

                    RIVERDALE BODY SHOP
              WHERE CUSTOMER SATISFACTION IS #1
                       7830 US 41
                   ST JOHN, IN  46373-
                     (219) 365-9600

Owner: JEFFY JAMES                          Day Phone: (219) 555-1639-
Address: 1223 W HILL                         Other Ph: (   )    -    -
CROWN POINT IN 46307                        Deductible: $  250.00

Insurance Co.: AMERICAN STATES INSURANCE                Phone:
Claim No.: 12651PD1.............2/98   Adj.:

VIN: 2G2 WIDESIDE 2D SHORT BLACK  8-5.7L-FI
Plate: MTLE535560  License: 52411S   IN Prod Date:  2/90 Odometer:    64213

Automatic transmission   Power steering          Power brakes
Power windows            Power locks             Tinted glass
Color-coded moldings     Dual mirrors            Air conditioning
Tilt wheel               Cruise control          Fog lamps
Air bag                  Fm radio                Stereo
Vinyl roof               Cloth seats             Bucket seats
Damaged/Damage seats     Aluminum wheels         Clear coat paint
Sunroof/moonroof         Rear step bumper        Sliding rear window
-----------------------------------------------------------------------------
                                                 PART
Line  Op.   DESCRIPTION OF DAMAGE          QTY   COST  LABOR PAINT   MISC
-----------------------------------------------------------------------------
            FRONT BUMPER
            O/H Front Bumper                1     0.00   1.6   0.0
Repl.       A/M Fc br chrm w/o ar intk w/i  1   146.00  Incl   0.0
Repl.       Chtr fllr w/o grll vnt hls w/o  1    33.75   0.3   0.8
            Add for Clear Coat              1     0.00   0.0   0.2
Repl.       License bracket w/impact strip  1    19.66   0.3   0.0

            FRONT LAMPS
Repl.       LHQ RT Headlamp assy      +20%  1   120.00   0.5   0.0
            Rlm headlamps                   1     0.00   0.5   0.0

            HOOD
Repair      Hood                            1     0.00   5.0   3.2
            Overlap Minor Panel             1     0.00   0.0  -0.2
            Add for Clear Coat              1     0.00   0.0   1.2

            FENDER
Repl.       A/M-CAPA RT Fender              1    87.00   2.8   2.6
            Overlap Major Adjacent Panel    1     0.00   0.0  -0.4
            Add for 2-Tone Refinish         1     0.00   0.0   0.9
            Add for Clear Coat              1     0.00   0.0   0.4
            Add for Edging                  1     0.00   0.0   0.5
Repl.       A/M RT Wheelhouse w/o 15000 GV  1    58.00   0.6   1.0

            FRONT SUSPENSION
Repl.       RT Lower cntrl arm              1   291.00   1.4   0.0 M

            STRUCTURAL REPAIRS
            FRAME SET UP ON RACK            1     0.00   1.0   0.0
            PULL KNEE ASSY TO LENGTH        1     0.00   2.5   0.0 F
```

B

```
DAMAGE REPORT                                          JAMES
02/17/98 at 11:34                                      D.R. 34942-0003600
                                                       Est: R. GLEASON

 31
 32*          MISC. ITEMS
 33*     E-COAT PER PANEL                1     0.00   0.0   0.0 T    14.00
 34*     TINT COLOR                      1     0.00   0.0   0.5
 35*     BLEND ADJACENT PANELS           1     0.00   0.0   1.0
 36*     TAPE PIN STRIPES                1     0.00   0.0   0.0 X    30.00
 37*     LIQUID MASK FOR OVERSPRAY       1     0.00   0.0   0.0 T     5.00
 38*     HAZARDOUS WASTE DISPOSAL        1     0.00   0.0   0.0 X     2.50
         Towing Charges                  1     0.00   0.0   0.0 X    50.00
-----------------------------------------------------------------------------
                   Subtotals   ===>          755.41  16.5  11.7      101.50

***NOTE*** HIDDEN DAMAGE: OPEN...RPG.
                                  Parts                                755.41
                                  Body  Labor     12.6 units @ $36.00   453.60
                                  Paint Labor     11.7 units @ $36.00   421.20
                                  Paint/Materials 11.7 units @ $18.00   210.60
                                  Frame Labor      2.5 units @ $50.00   125.00
                                  Mech. Labor      1.4 units @ $57.00    79.80
                                  Sublet/Misc                           101.50
                                  ---------------------------------------------
                                  SUBTOTAL                        $    2147.11
                                  Tax on $   985.01 at  5.0000%          49.25
                                  ---------------------------------------------
                                  GRAND TOTAL                     $    2196.36

                                  ADJUSTMENTS:
                                    Deductible                         -250.00
                                  ---------------------------------------------
                                  CUSTOMER PAYS                   $     250.00
                                  INSURANCE PAYS                  $    1946.36

THIS  ESTIMATE  HAS  BEEN  PREPARED BASED ON THE USE OF ONE OR MORE REPLACEMENT
PARTS  SUPPLIED  BY  A  SOURCE  OTHER  THAN  THE  MANUFACTURER  OF  YOUR  MOTOR
VEHICLE.  WARRANTIES  APPLICABLE  TO  THESE  REPLACEMENT PARTS  ARE PROVIDED BY
THE  MANUFACTURER  OR  DISTRIBUTOR  OF  THE  REPLACEMENT  PARTS  RATHER THAN BY
THE MANUFACTURER OF YOUR MOTOR VEHICLE.

Estimate based on MOTOR CRASH ESTIMATING GUIDE. Non-asterisk(*) items are derived from the Guide DR1GH88. Database Date 10/97
Double asterisk(**) items indicate part supplied by a supplier other than the original equipment manufacturer.
CAPA items have been certified for fit and finish by the Certified Auto Parts Association.
EZEst - A product of CCC Information Services Inc.
```

FIGURE 10-28 This is a printed computer-based estimate. Study it closely to see how all part prices, material prices, labor charges, frame charges, and other data have been included on a damage report or estimate. (**A**) The first page of a computerized estimate lists information on the vehicle. The lower part of the estimate gives a description of the damage, parts costs, labor costs, and paint costs for each task. (**B**) The second page of the estimate lists costs for tinting color, blending paint into another panel, hidden damage to body, paint, frame, and mechanical parts, and it also gives the subtotal, grand total, etc. It also gives the amount the customer and insurance company must pay the insurance company depending upon the insurance deductible amount.

HIDDEN DAMAGE

Some estimates do include a so-called "hidden damage clause" that permits added charges to the original estimate. When hidden damages are discovered after exterior panels or parts are removed for repairs, this is called an *estimate supplement*.

IMAGING SOFTWARE

Advanced computer estimating systems now enable photos of wrecked vehicles to be downloaded to a shop's computers.

A *digital camera* can be used to take photos of a vehicle's damage and store them as digital data. The camera can be connected to the computer to download these *digital images* (pictures stored as computer data) into memory or onto the computer's internal hard drive.

The estimator can look at these photos on the computer screen or monitor while finalizing the estimate. The electronic images can also be sent to the insurance adjuster so he or she can evaluate the vehicle's damage.

Imaging software allows you utilize digital pictures of vehicle damage or of a specific part with your computer estimating system (Figure 10–29).

Imaging software allows shop personnel to capture and retrieve data and images using the most flexible, time-saving, and reliable communications available. Plus, imaging software normally works with compatible estimating software to give your shop a complete, easy-to-use solution for handling repair and estimating information.

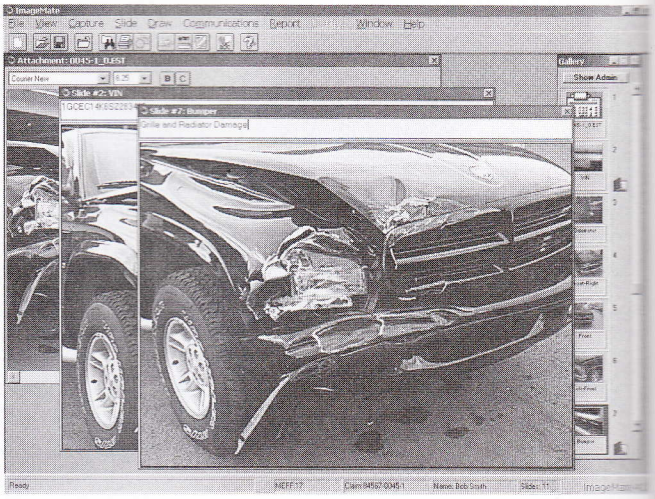

FIGURE 10–29 Digital pictures of the damage will help speed approval of repairs from an insurance company. Digital camera images can be downloaded into the shop's computer. *(Courtesy of Mitchell 1)*

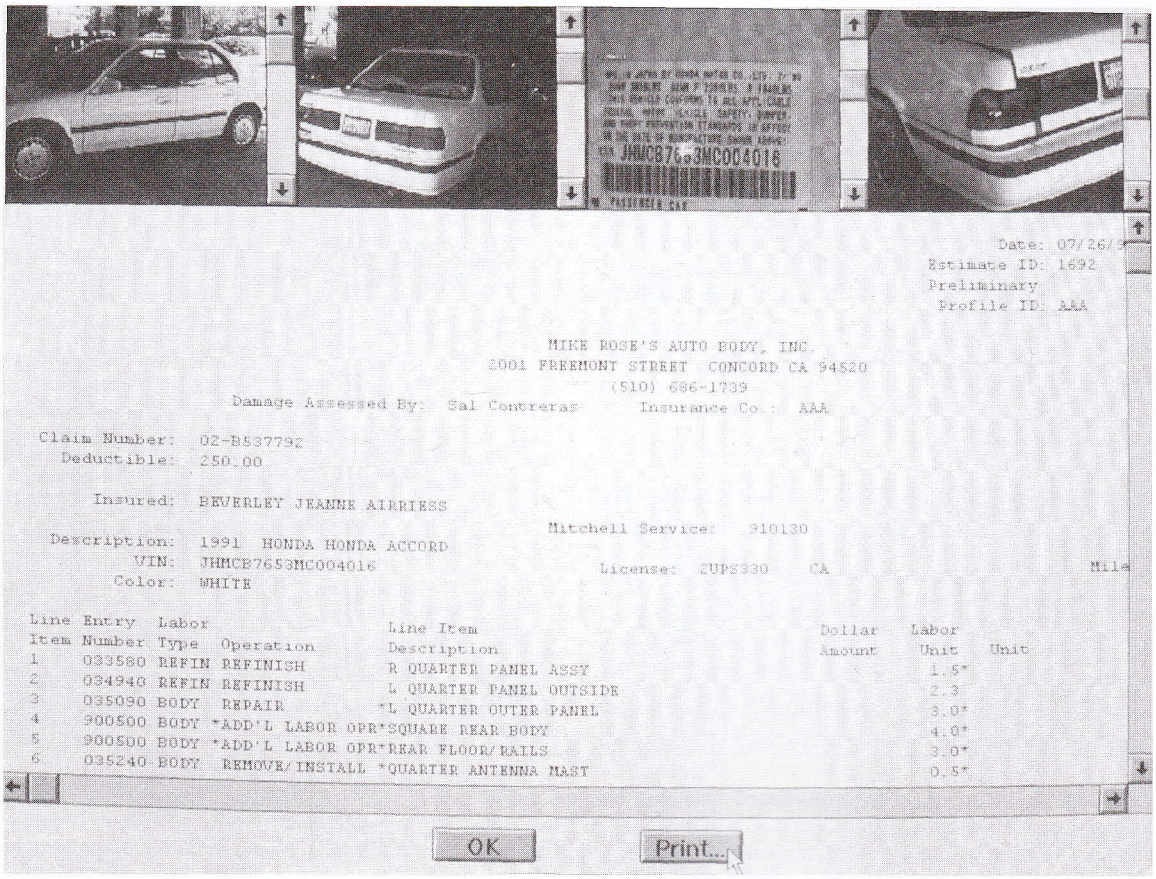

FIGURE 10–30 With today's shop software, you can e-mail an estimate with pictures of the vehicle damage to the insurance company adjuster. The insurance company may then approve repairs without actually physically inspecting the wrecked vehicle. *(Courtesy of Mitchell 1)*

Digital imaging frees the shop from the ongoing costs of traditional photography development. It eliminates the cost of film, processing, and print fees, as well as associated costs in time. This software provides instant access to any photo ever entered into the computer system. Most software organizes photos into "job folders" right along with the estimate and other service information. Look at Figure 10–30.

A printer can be used to make a *hard copy* (printed images on paper) for the customer, insurance adjusters, and shop personnel. You can quickly print vehicle dimension drawings, part views, or the actual estimate.

With computer-based estimating, printouts or Internet files with pictures of the damaged vehicle can be sent out to an insurance adjuster for approval.

10.9 VEHICLE TOTAL LOSS

A *total loss* occurs when the cost of the repairs exceeds the value of the vehicle. The insurance company or customer will normally *not* want the vehicle repaired in that case. Instead, the insurance company will write a check to cover the cost of a replacement vehicle. An equivalent year, make, and model vehicle can then be purchased by the customer.

The insurance company usually determines if a vehicle is a total loss. The company will evaluate the estimate and market prices for comparable vehicles when making this decision. Older vehicles are written up as a total loss more than late model vehicles. This is because of their low replacement cost.

The first critical decision that the estimator must make is the repairability of the vehicle. If the car was involved in a severe collision, there is a strong possibility that the total repair costs will exceed its market value. For example, repairs are not practical for a car with a market value of $1,150.00 (if undamaged) and a repair estimate that totals $2,700.00. More than likely the insurance company adjuster will agree with such a decision and would authorize "totaling" the vehicle.

BLUE BOOK

The auto industry "blue book" (Figure 10–31) lists the market values for used vehicles in various conditions. Refer to this type of publication when decisions to "repair or scrap" badly damaged vehicles must be made.

Of course, cars that have been wrapped around trees, crushed almost flat, or sliced in half by extreme collision forces are obvious examples of cars to be totaled (Figure 10–32).

Some totaled vehicles have a *salvage value*, which is the price a junkyard will pay for the totaled vehicle. Parts of a wrecked car or truck, such as the engine, transmission, drive shaft, and other body parts, might be usable and salvageable. The totaled vehicle will usually be auctioned or sold to a salvage yard or recycler. The recycler will then disassemble the vehicle and sell its parts for a profit (Figure 10–33).

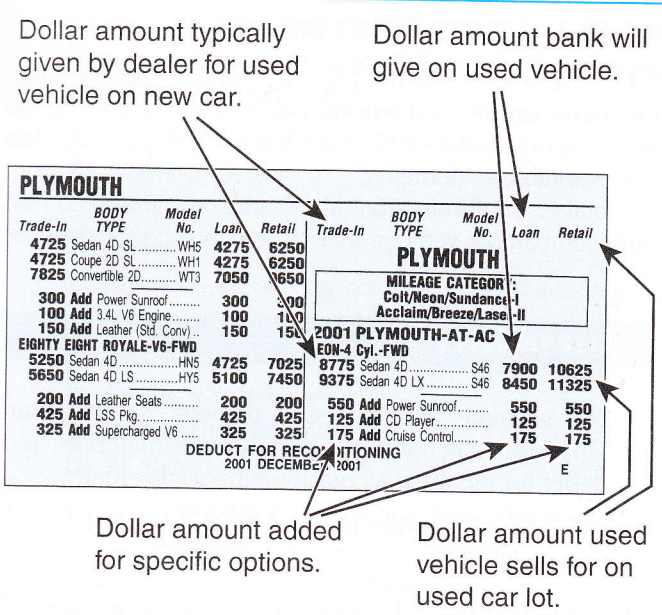

FIGURE 10–31 A partial page from the "blue book" or dealers' used car guide lists what specific vehicles are worth in dollars. Note the different values of a used car: trade in, wholesale, and retail. Retail is the highest dollar value and is what the vehicle might sell for on a used car lot. Trade-in and loan values are lower. A blue book is used to determine if a vehicle is a total loss. If the cost of repairs is higher than the value of a vehicle, the insurance company would not approve repairs but would give the customer a check to purchase another vehicle. *(Used with permission from the N.A.D.A. Used Car Guide® Company)*

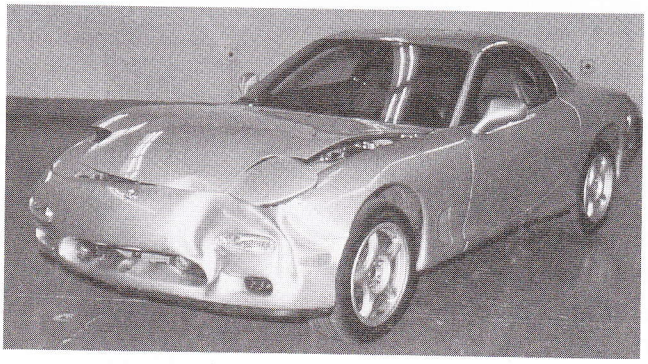

FIGURE 10–32 At first glance, this totaled vehicle may seem repairable at reasonable cost, but hidden and indirect damage makes repairs too costly for the value of the vehicle. *(Courtesy of Tech-Cor)*

FIGURE 10–33 Salvage yards are a good source of automobile parts. Recycled parts may save repair time and improve repair quality because they have factory corrosion protection. New parts might require more time to clean, treat, and refinish. *(Courtesy of Tech-Cor)*

TOTAL LOSS SOFTWARE

Total loss software helps organize vehicle damage data into easily understood reports that offer all the knowledge and support insurance claims adjusters need to reach fair and equitable settlements.

Total loss software often allows claims adjusters to find truly comparable vehicles that closely match the total loss vehicle, which helps to increase customer acceptance and satisfaction. Claims adjusters simply go on-line to find the real-time comparable vehicles for sale in the current market. The software guides the user through the system to generate accurate, actual cash valuation reports from the National Automobile Dealers Association (NADA), the National Market Reports (NMR) Blue Book, and Red Book Canada.

SUMMARY

1. An estimate, also called a damage report or an appraisal, calculates the cost of parts, materials, and labor for repairing a collision-damaged vehicle.
2. An estimate is a firm bid for a given period of time—usually 30 days.
3. Computerized estimating systems using a personal computer (PC) provide more accurate and consistent damage reports.
4. The dial-up estimating system relies on data stored in a mainframe computer at a remote location.
5. An in-shop estimating system has all of the data needed at the shop office, usually on CDs.
6. A total loss occurs when the cost of the repairs exceeds the value of the vehicle.
7. The flat rate is a preset amount of time and money charged for a specific repair operation.

EXERCISES

On a separate sheet of paper, complete the following learning activities for this chapter. Write definitions for the key terms and answer the ASE-style review questions, essay questions, critical thinking problems, and math problems. You can also do the outside activities, possibly for extra credit.

KEY TERMS

access time
computer-based estimating
computer database
deductible clause
estimating program
flat rate
front clip assembly
included operations
job overlap
overhaul (O/H)
procedure pages
remove and install (R&I)
remove and replace (R&R)
salvage parts
stress cracks
work order

ASE-STYLE REVIEW QUESTIONS

1. Technician A uses the flat rate labor times reported in collision damage manuals only as a guide for estimating. Technician B uses them as exact times in estimates. Who is correct?
   A. Technician A
   B. Technician B
   C. Both A and B
   D. Neither A nor B
2. How long does an estimate usually remain a firm bid?
   A. 1 year
   B. 6 months
   C. 90 days
   D. 30 days
3. Which of the following abbreviations found in collision estimating guides means that the item in question should be removed as an assembly, set aside, and later reinstalled?
   A. R&R
   B. R&I
   C. O&H
   D. O/H
4. Many insurance policies contain a ___ clause, which means that the owner is responsible for a given amount of the estimate (usually the first $100 to $1,000).
   A. Premium
   B. Deductible
   C. Review
   D. Final

5. Which of the following conditions is a good sign of minor body distortion?
   A. Stress cracking
   B. Front clip
   C. Side clip
   D. All of the above

6. This is used to take photos of a vehicle's damage and store them in a computer estimating system.
   A. Scanner
   B. Digital camera
   C. Film camera
   D. Bar code reader

7. What is the name given to jobs that can be performed individually but are also part of another operation?
   A. R&R
   B. Overlapping procedures
   C. Included operations
   D. Flat rate

8. What is the smallest typical increment in which labor times are listed in crash estimating guides?
   A. Hours
   B. Half-hours
   C. Quarter hours
   D. Tenths of an hour

9. Technician A says estimates are used in place of work orders in most shops. Technician B says estimates are used to help write work orders. Who is correct?
   A. Technician A
   B. Technician B
   C. Both A and B
   D. Neither A nor B

10. Technician A says a totaled vehicle has no salvage value. Technician B says that a totaled vehicle often has salvage value. Who is correct?
    A. Technician A
    B. Technician B
    C. Both A and B
    D. Neither A nor B

11. Which of the following is not included in the refinishing times for painting a new panel?
    A. Removing moldings
    B. Featheredging body putty
    C. Masking handles
    D. All of the above

12. Which of the following operations is included in the refinishing times listed in the damage manuals?
    A. Scuff sanding the repair area
    B. Masking the complete vehicle to prevent overspray damage
    C. Tinting the colorcoat
    D. All of the above

13. Printed estimating guides produced from the same database as the computer program serve as a___.
    A. Verification check for data used to generate the computer estimate
    B. Backup system in the event of breakdown or power loss
    C. Portable reference guide and a source of additional useful information
    D. All of the above

14. Computer programs or instructions written in a computer language that tell a computer what to do are also known as ___.
    A. Hardware
    B. Jargon
    C. Software
    D. Menus

ESSAY QUESTIONS

1. List the advantages of a resident data system.
2. When writing an estimate, what are some of the problems to look for?
3. Doors that are out of alignment and cracked stationary glass are often solid clues to what?
4. What does *salvage value* mean?

CRITICAL THINKING QUESTIONS

1. If you make your estimate too low or too high, how could it affect the shop operation?
2. A car was driven over a cement median curb at high speed by a drunken driver. You find cracked sealer around the front frame rails. What does this tell you about the vehicle's damage?