ORDER NO.: L89
CONTRACT ID. NO.: C000109813C01B

Form C-6a
Rev. 3-22-05

CNSP (S) 1-9-06

COMMONWEALTH OF VIRGINIA
DEPARTMENT OF TRANSPORTATION
BID PROPOSAL AND CONTRACT

ROUTE NUMBER: 29

FHWA NUMBER: NONE

PROJECT NUMBER: 0029-000-859,C501,B605

COUNTY: ARLINGTON

DISTRICT: NORTHERN VIRGINIA

DESCRIPTION: ROSSLYN CIRCLE IMPROVEMENTS, WB. LEE HWY-US 29

LOCATION: INT. WB. LEE HWY.(RTE. 29) AND LYNN ST.

DATE BID SUBMITTED: 10:00 A.M., WEDNESDAY, DECEMBER 20, 2017

ORDER NO.: L89
CONTRACT ID. NO.: C000109813C01B

Form C-118
Rev. 7-6-05

COMMONWEALTH OF VIRGINIA
DEPARTMENT OF TRANSPORTATION
NOTICE TO BIDDERS

As a matter of information, the bidder's attention is directed to the points noted herein. Every point enumerated below is fully covered by proposal documents that describe them in detail. Bidders should check their proposal against all requirements, as strict compliance with all provisions is mandatory.

1. Bids shall be filed electronically through Bidx (www.bidx.com\main\index.html) at the times designated in the Notice of Advertisement for Bids. For information see (http://cabb.virginiadot.org/cabb/)

2. Unless otherwise specified or permitted in the proposal, prices shall be submitted on all items shown in the proposal.

3. Proposals conditioned by proposed alternates, other than those specified or permitted, or by reserving the right to accept or reject an award or to enter into a contract pursuant to an award will not be considered.

4. A bid total shall be shown in each space provided.

5. Bid bonds shall conform to Section 102.07. The bid bond number shall be placed in the appropriate space in your electronic bid. As an alternative you may complete the bottom line of the Form C-24. This form may be mailed or faxed but must be received prior to the opening of the bids.

6. Joint venture proposals shall show the Firm Name of each party and shall be signed by an authorized representative of each Firm. A letter shall be filed with the prequalification office describing responsibility of each firm and the amount of maximum capacity pledge by each firm of a joint venture.

ORDER NO.: L89
CONTRACT ID. NO.: C000109813C01B

Form C-24
Rev. 7-6-05

COMMONWEALTH OF VIRGINIA
DEPARTMENT OF TRANSPORTATION
PROPOSAL GUARANTY

KNOW ALL MEN BY THESE PRESENTS, THAT WE _____ as principal, and _____ Surety, are held and firmly bound unto the Commonwealth of Virginia as obligee, in the amount of FIVE PERCENT OF THE DOLLAR VALUE OF THE BID, lawful money of the United States of America, for the payment of which, well and truly to be made, we bind ourselves, our heirs, executors, administrators, successors and assigns, jointly and severally and firmly by these presents.
SIGNED, sealed and dated this _____ day of _____ 20 _____

WHEREAS, the above said principal is herewith submitting its proposal for:
PROJECT NUMBER: 0029-000-859,C501,B605

NOW, THEREFORE, the condition of the above obligee is such, that if the aforesaid principal shall be awarded the contract upon said proposal and shall within the time specified in the Specifications after the notice of such award enter into a contract and give bond for the faithful performance of the contract, then this obligation shall be null and void; otherwise to remain in full force and effect and the principal and surety will pay unto the obligee the difference in money between the amount of the bid of the said principal and the amount for which the obligee may legally contract with another party to perform the said work if the latter amount be in excess of the former; but in no event shall the liability exceed the penal sum hereof.

_____ (Principal*)	_____ (Surety Company)
By: _____ (Officer, Partner or Owner) (Seal)	By: _____ (Attorney-in-Fact**) (Seal)
_____ (Principal*)	_____ (Address)
By: _____ (Officer, Partner or Owner) (Seal)	By: _____ (Surety Company)
_____ (Principal*)	_____ (Attorney-in-Fact**) (Seal)
By: _____ (Officer, Partner or Owner) (Seal)	By: _____ (Address)

*Note: If the principal is a *joint venture*, each party thereof must be named and execution made by same hereon. If there is more than one surety to the bid bond, each surety must be named and execution shall be made by same hereon.
Electronic Bid Only: In lieu of completing the above section of the Contract Performance Bond, the Principal shall file an Electronic Bid Bond when bidding electronically. By signing below the Principal is ensuring the identified electronic bid bond has been executed and the Principal and Surety are firmly bound unto the Commonwealth of Virginia under the same conditions of the bid bond as shown above.

_____ Electronic Bid Bond ID	_____ Company/Bidder Name	_____ Signature and Title

**Attach copy of Power of Attorney

ORDER NO.: L89
CONTRACT ID. NO.: C000109813C01B

Form C-48
Rev. 2-23-11

COMMONWEALTH OF VIRGINIA
DEPARTMENT OF TRANSPORTATION

SUBCONTRACTOR/SUPPLIER SOLICITATION AND UTILIZATION FORM (ALL BIDDERS)

PROJECT NO.:0029-000-859,C501,B605 CONTRACT ID. NO.: C000109813C01B

FHWA NO: NONE DATE SUBMITTED_____

All bidders, including DBEs bidding as Prime Contractors, shall complete and submit the following information as requested in this form within ten (10) business days after the opening of bids.

The bidder certifies this form accurately represents its solicitation and utilization or non-utilization, as indicated, of the firms listed below for performance of work on this contract. The bidder also certifies he/she has had direct contact with the named firms regarding participation on this project.

BIDDER_____SIGNATURE_____

TITLE_____

SUBCONTRACTOR/SUPPLIER SOLICITATION AND UTILIZATION (ALL)

VENDOR NUMBER	NAME OF SUBCONTRACTOR/SUPPLIER	TELEPHONE NUMBER	DBE OR NON-DBE	UTILIZED (Y/N)

NOTE: ATTACH ADDITIONAL PAGES, IF NECESSARY.

BIDDER MUST SIGN EACH ADDITIONAL SHEET TO CERTIFY ITS CONTENT AND COMPLETION OF FORM.

Virginia Department of Transportation

Date Printed: 10/04/2017

Contract ID: C000109813C01B

FORM C-21B

Order No.: L89

Rev 12-21-05

Bid Items Eligible For Fuel Adjustment

Instructions: This form shall be completed in accordance with the Special Provision for Optional Adjustment for Fuel. If you choose to have Fuel Adjustment applied to any of the items listed below, write the word "Yes" in the "OPTION" column beside the item. The form must be signed, dated, and submitted to the Contract Engineer within the timeframe required in the Special Provision.

SECTION: 0001 REGULAR BID ITEMS

Item Number	Item Description	Fuel Factor gal/unit	Option
00120	REGULAR EXCAVATION	0.29	_____
00525	CONCRETE CLASS A3 MISC.	1.89	_____
10013	CEMENT STAB. AGGR. MATL. NO. 21A	0.60	_____
10598	ASPHALT CONCRETE TY. SM-9.5A TEMPORARY TRAIL PAVEMENT 2"	3.50	_____
10628	FLEXIBLE PAVEMENT PLANING 0" - 2"	0.07	_____
10635	ASPHALT CONC.TY. SM-9.5A	3.50	_____
10636	ASPHALT CONC.TY. SM-9.5D	3.50	_____
13565	RETAINING WALL EXCAVATION	0.29	_____
16365	ASPHALT CONC. TY. IM-19.0A	3.50	_____
16390	ASPH. CONC. BASE COURSE TY. BM-25.0A	3.50	_____
24430	DEMOLITION OF PAVEMENT (FLEXIBLE)	0.20	_____
68040	CONCRETE CLASS A4	1.89	_____
69030	CONCRETE CLASS A3	1.89	_____
69040	CONCRETE CLASS A4	1.89	_____

Date: _____

Signature: _____

_____
(Firm or Corporation)

_____
(Vendor No.)

Bid Items Eligible For Steel Price Adjustment

Instructions: This form shall be completed in accordance with the Special Provision. If you choose to have Steel Price Adjustment applied to any of the items listed below, write the word "Yes" in the "OPTION" column beside the item. The form must be signed, dated, and submitted to the Contract Engineer within the timeframe required in the Special Provision.

SECTION: 0001 REGULAR BID ITEMS

Item Number	Item Description	Option
13280	GUARDRAIL GR-MGS1	_____
13286	GUARDRAIL TERMINAL GR-MGS2	_____
51425	SIGNAL POLE , PEDESTAL POLE PF-2, 8'-15'	_____
51425	SIGNAL POLE , TRAF. SIGNAL HEAD SEC. 12" LED BICYCLE	_____
51426	MAST ARM POLE - FOR 58' MAST ARM NR-T58,R,H58,XX	_____
51426	MAST ARM H28-F50	_____
51426	MAST ARM H28-F60	_____
51426	MAST ARM H40-F40	_____
51426	MAST ARM H44-F50	_____
51426	MAST ARM POLE, COMB. MAST ARM - FOR 62' MAST ARM WITH 6' LUMAINIRE ARM NR-T70,R,H70,XX	_____
51426	MAST ARM POLE, COMB. MAST ARM - FOR 55' MAST ARM WITH 10' LUMINAIRE ARM NR-T56,R,H56,XX	_____
51426	MAST ARM POLE, COMB. MAST ARM - FOR 45' MAST ARM WITH 6' LUMINAIRE ARM NR-46,R,H46,XX	_____
51426	MAST ARM POLE, COMB. MAST ARM - FOR 40' MAST ARM WITH 6' LUMINAIRE ARM NR-T40,R,H40,XX	_____
51426	MAST ARM POLE, COMB. MAST ARM - DUAL 55' AND 27' ARM WITH 9' LUM. ARM NR-T56,R,H56,H28,XX	_____
51426	MAST ARM POLE, COMB. MAST ARM - DUAL 44' AND 28' ARMS WITH 9' LUM ARM NR-T44,R,H44,H28,XX	_____
51426	MAST ARM POLE - FOR 50' MAST ARM NR-T50,R,H50,XX	_____
51426	MAST ARM POLE - FOR 40' MAST ARM NR-T40,R,H40,XX	_____
51426	MAST ARM H70-F70	_____
51426	MAST ARM H58-F60	_____
51426	MAST ARM H56-F60	_____
51426	MAST ARM H50-F50	_____
51426	MAST ARM H46-F50	_____
68091	CORROSION RESISTANT REINF. STEEL CL. I	_____
68093	CORROSION RESISTANT REINF. STEEL CL. III	_____
69093	CORROSION RESISTANT REINF. STEEL CL. III	_____
69093	CORROSION RESISTANT REINF. STEEL CL. III	_____
69100	REINF. STEEL	_____

Date: _____

Signature: _____

_____
(Firm or Corporation)

_____
(Vendor No.)

ORDER NO.: L89
CONTRACT ID. NO.: C000109813C01B

Form C-7
Rev. 1-19-12

TERMS OF THE PROPOSAL\CONTRACT
COMMONWEALTH OF VIRGINIA
DEPARTMENT OF TRANSPORTATION
SUBMITTED: 10:00 A.M., WEDNESDAY, DECEMBER 20, 2017

PROJECT NUMBER: 0029-000-859,C501,B605
ROUTE NUMBER: 29
FHWA NUMBER: NONE

DESCRIPTION: ROSSLYN CIRCLE IMPROVEMENTS, WB. LEE HWY-US 29
LOCATION: INT. WB. LEE HWY.(RTE. 29) AND LYNN ST.

DISTRICT: NORTHERN VIRGINIA COUNTY: ARLINGTON

I/we declare that no other person, firm or corporation is interested in this proposal; that I/we have carefully examined the plans, job specifications, current Road and Bridge specifications, and all other documents pertaining thereto and thoroughly understand the contents thereof; that I/we meet the prequalification requirements for bidding on this proposal; that I/we understand that the plans and current Road and Bridge specifications, are a part of this proposal; that all of the quantities shown herewith are a part of this proposal; that all the quantities shown herewith are approximate only; that I/we have examined the location of the proposed work and source of supply of materials; and that I/we agree to bind myself/ourselves upon award by the Commonwealth under this proposal to a contract with necessary surety bond to start work according to project specifications, and to complete all work in accordance with the plans, job specifications and current Road and Bridge Specifications within the time limit set forth in the contract.

COMPLETION DATE: APRIL 30, 2020

BID TOTAL $_____

Attached is a bond conforming to the requirements of the current Road and Bridge Specifications, it being understood that such bond is to be forfeited as liquidated damages if, upon acceptance of the terms of this proposal, I/we fail to execute the contract and furnish bond as provided in the current Road and Bridge Specifications.

_____

(Names of Individual(S),Firm(S) Or Corporation)

_____ _____

Street Address City State Zip Code Vendor#/Fin#

_____ _____ _____

Print Name Signature Title

In consideration of the commitments made as shown herein, the Commonwealth of Virginia by The Commonwealth Transportation Commissioner agrees to pay for all items of work performed and materials furnished at the unit price(s) and under the conditions set forth in this proposal, in witnessed by the affixing of the name below.

Contract Execution Date _____ By _____

CHIEF ENGINEER
VIRGINIA DEPARTMENT OF TRANSPORTATION

Proposal ID: C000109813C01B Oversight/State Project No.: 0029-000-859, C501, B605
Order No.: L89 Federal Project No.: NONE

Contractor: _____

SECTION: 0001 REGULAR BID ITEMS
Cat Alt Set ID: Cat Alt Mbr ID:

Proposal Line Number	Spec No.	Item ID / Description	Approximate Quantity and Units	Unit Price Dollars	Unit Price Cents	Bid Amount Dollars	Bid Amount Cents
0010	513	00100 MOBILIZATION	LUMP SUM	LUMP SUM		_____	_____
0020	517	00101 CONSTRUCTION SURVEYING (CONSTRUCTION)	LUMP SUM	LUMP SUM		_____	_____
0030	301	00110 CLEARING AND GRUBBING	LUMP SUM	LUMP SUM		_____	_____
0040	303	00120 REGULAR EXCAVATION	3,178.000 CY	_____	_____	_____	_____
0050	ATTD	00124 ROCK EXCAVATION	15.000 CY	_____	_____	_____	_____
0060	ATTD	00134 TEST EXCAVATION UTILITY TEST HOLE IN PAVED AREAS	10.000 EA	_____	_____	_____	_____
0070	302 504	00525 CONCRETE CLASS A3 MISC.	5.000 CY	_____	_____	_____	_____
0080	509	00529 FLOWABLE BACKFILL	6.500 CY	_____	_____	_____	_____
0090	ATTD	00536 CONCRETE FOUND. SIGNAL POLE (PER ARLINGTON COUNTY TS7-1.10)	55.000 CY	_____	_____	_____	_____
0100	501	00588 UNDERDRAIN UD-4	1,144.000 LF	_____	_____	_____	_____
0110	501	00595 OUTLET PIPE	71.000 LF	_____	_____	_____	_____
0120	302	00596 ENDWALL EW-12	1.000 EA	_____	_____	_____	_____
0130	ATTD	00598 UNDERDRAIN INSPECT EXISTING	600.000 LF	_____	_____	_____	_____

Proposal ID: C000109813C01B Oversight/State Project No.: 0029-000-859, C501, B605
Order No.: L89 Federal Project No.: NONE

Contractor: _____

SECTION: 0001 REGULAR BID ITEMS
Cat Alt Set ID: Cat Alt Mbr ID:

Proposal Line Number	Spec No.	Item ID / Description	Approximate Quantity and Units	Unit Price Dollars	Unit Price Cents	Bid Amount Dollars	Bid Amount Cents
0140	302	01152 15" CONC. PIPE	428.000 LF	_____.	____	_____.	____
0150	PLAN	02091 PIPE REHABILITATION (FOR EX. 21 TO EX. 22)	1.000 EA	_____.	____	_____.	____
0160	PLAN	02091 PIPE REHABILITATION (FOR EX. 29 TO EX. 28)	1.000 EA	_____.	____	_____.	____
0170	PLAN	02091 PIPE REHABILITATION (FOR EX. 30 TO EX. 29)	1.000 EA	_____.	____	_____.	____
0180	PLAN	02091 PIPE REHABILITATION (FOR EX. 36 TO EX. 31)	1.000 EA	_____.	____	_____.	____
0190	PLAN	02091 PIPE REHABILITATION (FOR EX. 4 TO EX. 2)	1.000 EA	_____.	____	_____.	____
0200	302	06747 DROP INLET DI-2B,L=4'	1.000 EA	_____.	____	_____.	____
0210	302	06748 DROP INLET DI-2B,L=6'	1.000 EA	_____.	____	_____.	____
0220	302	06815 DROP INLET DI-3A	1.000 EA	_____.	____	_____.	____
0230	302	06817 DROP INLET DI-3B,L=4'	1.000 EA	_____.	____	_____.	____
0240	302	06819 DROP INLET DI-3B,L=8'	1.000 EA	_____.	____	_____.	____
0250	302	06821 DROP INLET DI-3B,L=12'	1.000 EA	_____.	____	_____.	____
0260	302	06822 DROP INLET DI-3B,L=14'	1.000 EA	_____.	____	_____.	____

Proposal ID: C000109813C01B Oversight/State Project No.: 0029-000-859, C501, B605
Order No.: L89 Federal Project No.: NONE

Contractor: _____

SECTION: 0001 REGULAR BID ITEMS
Cat Alt Set ID: Cat Alt Mbr ID:

Proposal Line Number	Spec No.	Item ID / Description	Approximate Quantity and Units	Unit Price Dollars	Unit Price Cents	Bid Amount Dollars	Bid Amount Cents
0270	302	06829 DROP INLET DI-3BB,L=10'	1.000 EA	_____.	____	_____.	____
0280	302	07206 DROP INLET DI-4C,L=8'	1.000 EA	_____.	____	_____.	____
0290	302 PLAN	08990 DROP INLET MODIFIED DI-3C, L=6' (MONOLITHIC BOX REQ'D)	1.000 EA	_____.	____	_____.	____
0300	302 PLAN	08990 DROP INLET PRECAST TOP DI-4AA, L=4'	1.000 EA	_____.	____	_____.	____
0310	302 PLAN	08990 DROP INLET PRECAST TOP DI-4C, L=10'	1.000 EA	_____.	____	_____.	____
0320	302	09055 MANHOLE MH-2	27.400 LF	_____.	____	_____.	____
0330	302	09057 FRAME & COVER MH-1	5.000 EA	_____.	____	_____.	____
0340	307	10013 CEMENT STAB. AGGR. MATL. NO. 21A	234.000 TON	_____.	____	_____.	____
0350	308 309	10090 AGGR. MATL. NO. 21A	339.000 TON	_____.	____	_____.	____
0360	308 309	10100 AGGR. MATL. NO. 21B	79.000 TON	_____.	____	_____.	____
0370	308 309	10250 AGGR. MATERIAL NO. 57 DOUBLE WASHED	9.000 TON	_____.	____	_____.	____
0380	ATTD	10499 PAVEMENT 12"X12" INTERLOCKING CONCRETE PAVERS	159.000 SY	_____.	____	_____.	____

Proposal ID: C000109813C01B Oversight/State Project No.: 0029-000-859, C501, B605
Order No.: L89 Federal Project No.: NONE

Contractor: _____

SECTION: 0001 REGULAR BID ITEMS
Cat Alt Set ID: Cat Alt Mbr ID:

Proposal Line Number	Spec No.	Item ID / Description	Approximate Quantity and Units	Unit Price Dollars	Unit Price Cents	Bid Amount Dollars	Bid Amount Cents
0390	ATTD	10499 PAVEMENT 4" X 8" X 2-3/8" INTERLOCKING CONCRETE PAVER BAND	35.000 SY	_____	.	_____	.
0400	ATTD	10499 PAVEMENT 8" HEXAGONAL INTERLOCKING CONCRETE PAVERS	149.000 SY	_____	.	_____	.
0410	315 ATTD	10598 ASPHALT CONCRETE TY. SM-9.5A TEMPORARY TRAIL PAVEMENT 2"	31.000 TON	_____	.	_____	.
0420	515	10628 FLEXIBLE PAVEMENT PLANING 0" - 2"	8,439.000 SY	_____	.	_____	.
0430	315	10635 ASPHALT CONC.TY. SM-9.5A	169.000 TON	_____	.	_____	.
0440	315	10636 ASPHALT CONC.TY. SM-9.5D	1,688.000 TON	_____	.	_____	.
0450	502 ATTD	12025 CURB , ARLINGTON STANDARD HEADER CURB (C-3)	62.000 LF	_____	.	_____	.
0460	502	12600 STD. COMB. CURB & GUTTER CG-6	358.000 LF	_____	.	_____	.
0470	502 ATTD	12720 COMB. CURB & GUTTER , ARLINGTON STANDARD (C-2)	1,661.000 LF	_____	.	_____	.
0480	504	13108 CG-12 DETECTABLE WARNING SURFACE	84.000 SY	_____	.	_____	.
0490	504	13220 HYDRAULIC CEMENT CONC. SIDEWALK 4"	1,433.000 SY	_____	.	_____	.

Proposal ID: C000109813C01B Oversight/State Project No.: 0029-000-859, C501, B605
Order No.: L89 Federal Project No.: NONE

Contractor: _____

SECTION: 0001 REGULAR BID ITEMS
Cat Alt Set ID: Cat Alt Mbr ID:

Proposal Line Number	Spec No.	Item ID / Description	Approximate Quantity and Units	Unit Price Dollars	Unit Price Cents	Bid Amount Dollars	Bid Amount Cents
0500	505	13280 GUARDRAIL GR-MGS1	50.000 LF	_____.	____	_____.	____
0510	505	13286 GUARDRAIL TERMINAL GR-MGS2	1.000 EA	_____.	____	_____.	____
0520	502	13470 MEDIAN BARRIER MB-9A	12.000 LF	_____.	____	_____.	____
0530	512	13495 TRAF. BARR. SER. CONC. SINGLE FACE PAR.MB-10A	130.000 LF	_____.	____	_____.	____
0540	512	13496 TRAF. BARR. SER. CONC. DOUBLE FACE PAR.MB-11A	2,630.000 LF	_____.	____	_____.	____
0550	506	13530 RETAINING WALL RW-3	66.200 CY	_____.	____	_____.	____
0560	506 PLAN	13555 RETAINING WALL MODIFIED RW-3	13.100 CY	_____.	____	_____.	____
0570	506	13565 RETAINING WALL EXCAVATION	245.000 CY	_____.	____	_____.	____
0580	512	13710 IMPACT ATTENUATOR TYPE I-A WITH OBJECT MARKER	27.000 EA	_____.	____	_____.	____
0590	502	14414 CURB (CG-2)	375.000 LF	_____.	____	_____.	____
0600	502	15309 PAVEMENT COMMERCIAL DRIVEWAY ENTRANCE 9"	242.000 SY	_____.	____	_____.	____
0610	315	16365 ASPHALT CONC. TY. IM-19.0A	21.000 TON	_____.	____	_____.	____
0620	315	16390 ASPH. CONC. BASE COURSE TY. BM-25.0A	305.000 TON	_____.	____	_____.	____

Proposal ID: C000109813C01B Oversight/State Project No.: 0029-000-859, C501, B605
Order No.: L89 Federal Project No.: NONE

Contractor: _____

SECTION: 0001 REGULAR BID ITEMS
Cat Alt Set ID: Cat Alt Mbr ID:

Proposal Line Number	Spec No.	Item ID / Description	Approximate Quantity and Units	Unit Price Dollars	Unit Price Cents	Bid Amount Dollars	Bid Amount Cents
0630	507	23560 TEMP. SAFETY FENCE 4'	9,289.000 LF	_____.	____	_____.	____
0640	507 ATTD	23600 FENCE SHORT	117.000 LF	_____.	____	_____.	____
0650	507 ATTD	23600 FENCE TALL	145.000 LF	_____.	____	_____.	____
0660	ATTD	23600 FENCE TREE PROTECTION (4' HT)	285.000 LF	_____.	____	_____.	____
0670	512	24152 TYPE 3 BARRICADE 8'	41.000 EA	_____.	____	_____.	____
0680	512	24160 TEMPORARY (CONSTRUCTION) SIGN	2,169.000 SF	_____.	____	_____.	____
0690	512	24278 GROUP 2 CHANNELIZING DEVICES	9,600.000 DAY	_____.	____	_____.	____
0700	512	24279 PORTABLE CHANGEABLE MESSAGE SIGN	31,000.000 HR	_____.	____	_____.	____
0710	512	24282 FLAGGER SERVICE	200.000 HR	_____.	____	_____.	____
0720	508	24430 DEMOLITION OF PAVEMENT (FLEXIBLE)	140.000 SY	_____.	____	_____.	____
0730	510	24502 REMOVE EXIST. GUARDRAIL TERMINAL	2.000 EA	_____.	____	_____.	____
0740	510 PLAN	24502 REMOVE EXIST. STORM STRUCTURE EX. 21	1.000 EA	_____.	____	_____.	____
0750	510 PLAN	24502 REMOVE EXIST. STORM STRUCTURE EX. 29	1.000 EA	_____.	____	_____.	____

Proposal ID: C000109813C01B Oversight/State Project No.: 0029-000-859, C501, B605
Order No.: L89 Federal Project No.: NONE

Contractor: _____

SECTION: 0001 REGULAR BID ITEMS
Cat Alt Set ID: Cat Alt Mbr ID:

Proposal Line Number	Spec No.	Item ID / Description	Approximate Quantity and Units	Unit Price Dollars	Unit Price Cents	Bid Amount Dollars	Bid Amount Cents
0760	510 PLAN	24502 REMOVE EXIST. STORM STRUCTURE EX. 35	1.000 EA	_____	_____	_____	_____
0770	510 PLAN	24502 REMOVE EXIST. STORM STRUCTURE EX. 36	1.000 EA	_____	_____	_____	_____
0780	510 PLAN	24502 REMOVE EXIST. STORM STRUCTURE EX. 5	1.000 EA	_____	_____	_____	_____
0790	510 ATTD	24502 REMOVE EXIST. TY. I SIGN	33.000 EA	_____	_____	_____	_____
0800	510 ATTD	24536 ADJUST EXIST. FENCE	LUMP SUM	LUMP SUM		_____	_____
0810	505	24600 REMOVE EXISTING GUARDRAIL	165.000 LF	_____	_____	_____	_____
0820	510 ATTD	24703 REMOVE EXIST. MEDIAN BARRIER	20.000 LF	_____	_____	_____	_____
0830	510 PLAN	24703 REMOVE EXIST. STORM SEWER PIPE	81.000 LF	_____	_____	_____	_____
0840	ATTD	24712 RESET EXIST. , RELOCATE FIBER OPTIC CABLE	700.000 LF	_____	_____	_____	_____
0850	510 PLAN	24825 MODIFY EXIST. STORM STRUCTURE 5C-3 (REPLACE TOP ; ADD PIPE CONNECTION)	1.000 EA	_____	_____	_____	_____
0860	510 PLAN	24825 MODIFY EXIST. STORM STRUCTURE 5C-4 (REPLACE TOP; ADD UD CONNECTION)	1.000 EA	_____	_____	_____	_____

Proposal ID: C000109813C01B Oversight/State Project No.: 0029-000-859, C501, B605
Order No.: L89 Federal Project No.: NONE

Contractor: _____

SECTION: 0001 REGULAR BID ITEMS
Cat Alt Set ID: Cat Alt Mbr ID:

Proposal Line Number	Spec No.	Item ID / Description	Approximate Quantity and Units	Unit Price Dollars	Unit Price Cents	Bid Amount Dollars	Bid Amount Cents
0870	510 PLAN	24825 MODIFY EXIST. STORM STRUCTURE 5C-5 (REPLACE TOP; ADD UD CONNECTION)	1.000 EA	_____	_____	_____	_____
0880	510 PLAN	24825 MODIFY EXIST. STORM STRUCTURE EX. 28 (ADD PIPE CONNECTION; PLUG EXIST. CONNECTION)	1.000 EA	_____	_____	_____	_____
0890	510 ATTD	24832 ADJUST EXIST. MANHOLE FIBER OPTIC	7.000 EA	_____	_____	_____	_____
0900	ATTD	25001 HANDRAIL METAL	35.000 LF	_____	_____	_____	_____
0910	504	25004 HANDRAIL HR-1 TYPE III	110.000 LF	_____	_____	_____	_____
0920	514	25507 FIELD OFFICE TY.III	27.000 MO	_____	_____	_____	_____
0930	ATTD	25565 PROGRESS SCHEDULE BASELINE	LUMP SUM	LUMP SUM		_____	_____
0940	ATTD	25567 PROGRESS SCHEDULE UPDATES	23.000 EA	_____	_____	_____	_____
0950	603	27101 TEMPORARY SEED	143.000 LB	_____	_____	_____	_____
0960	603	27210 FERTILIZER(10-20-10)	860.000 LB	_____	_____	_____	_____
0970	303	27284 EROSION CONTROL MULCH	6,925.000 SY	_____	_____	_____	_____
0980	604	27300 SOD	909.000 SY	_____	_____	_____	_____

Proposal ID: C000109813C01B Oversight/State Project No.: 0029-000-859, C501, B605
Order No.: L89 Federal Project No.: NONE

Contractor: _____

SECTION: 0001 REGULAR BID ITEMS
Cat Alt Set ID: Cat Alt Mbr ID:

Proposal Line Number	Spec No.	Item ID / Description	Approximate Quantity and Units	Unit Price Dollars	Unit Price Cents	Bid Amount Dollars	Bid Amount Cents
0990	303	27451 INLET PROTECTION TYPE A	2.000 EA	_____	_____	_____	_____
1000	303	27461 INLET PROTECTION TYPE B	27.000 EA	_____	_____	_____	_____
1010	303	27505 TEMP. SILT FENCE TYPE A	1,215.000 LF	_____	_____	_____	_____
1020	ATTD	38950 LANDSCAPE , CONCRETE CURBED PLANTER	4.000 EA	_____	_____	_____	_____
1030	ATTD	38950 LANDSCAPE , RAISED CONCRETE PLANTER 96"X48"X36"	6.000 EA	_____	_____	_____	_____
1040	ATTD	38950 LANDSCAPE , TREE GRATE 48"X120"	3.000 EA	_____	_____	_____	_____
1050	510 ATTD	38950 LANDSCAPE RELOCATE EXISTING GATEWAY PARK SIGN	1.000 EA	_____	_____	_____	_____
1060	ATTD	38950 LANDSCAPE REMOVE AND DISPOSE OF TREE AND SHRUB	3.000 EA	_____	_____	_____	_____
1070	ATTD	38951 LANDSCAPE SEED AND MULCH	2,482.000 SY	_____	_____	_____	_____
1080	ATTD	38953 LANDSCAPE , IRRIGATION SYSTEM	LUMP SUM	LUMP SUM		_____	_____
1090	ATTD	38953 LANDSCAPE RELOCATE ECO-TOTEM BIKE COUNTER	LUMP SUM	LUMP SUM		_____	_____

Proposal ID: C000109813C01B Oversight/State Project No.: 0029-000-859, C501, B605
Order No.: L89 Federal Project No.: NONE

Contractor: _____

SECTION: 0001 REGULAR BID ITEMS
Cat Alt Set ID: Cat Alt Mbr ID:

Proposal Line Number	Spec No.	Item ID / Description	Approximate Quantity and Units	Unit Price Dollars	Unit Price Cents	Bid Amount Dollars	Bid Amount Cents
1100	ATTD	39001 TREE AMERICAN HOLLY 7'-8' HT., B&B	3.000 EA	_____.	____	_____.	____
1110	ATTD	39001 TREE BLACKGUM 1.5" CAL., B&B	3.000 EA	_____.	____	_____.	____
1120	ATTD	39001 TREE LONDON PLANETREE 3" CAL., B&B	10.000 EA	_____.	____	_____.	____
1130	ATTD	39001 TREE PIN OAK 3" CAL., B&B	1.000 EA	_____.	____	_____.	____
1140	ATTD	39001 TREE SCARLET OAK 3" CAL., B&B	2.000 EA	_____.	____	_____.	____
1150	ATTD	39001 TREE WHITE FRINGETREE 5'-6' HT., B&B	10.000 EA	_____.	____	_____.	____
1160	ATTD	39002 SHRUB , BLUE STAR JUNIPER	70.000 EA	_____.	____	_____.	____
1170	ATTD	39002 SHRUB BLUE MUFFIN ARROWWOOD 36" HT., CONT.	64.000 EA	_____.	____	_____.	____
1180	ATTD	39003 HERB , LITTLE BLUESTEM 1 GAL. CONT.	87.000 EA	_____.	____	_____.	____
1190	ATTD	39003 HERB , PENNSYLVANIA SEDGE 1 QT. CONT.	894.000 EA	_____.	____	_____.	____
1200	PLAN	41981 WATER FACILITIES , 12" STEEL SPLIT CASING	30.000 LF	_____.	____	_____.	____
1210	520 ATTD	41981 WATER FACILITIES , 12" WATER MAIN	1,110.000 LF	_____.	____	_____.	____

Proposal ID: C000109813C01B Oversight/State Project No.: 0029-000-859, C501, B605
Order No.: L89 Federal Project No.: NONE

Contractor: _____

SECTION: 0001 REGULAR BID ITEMS
Cat Alt Set ID: Cat Alt Mbr ID:

Proposal Line Number	Spec No.	Item ID / Description	Approximate Quantity and Units	Unit Price Dollars	Unit Price Cents	Bid Amount Dollars	Bid Amount Cents
1220	520 ATTD	41981 WATER FACILITIES , 6" WATER MAIN	27.000 LF	_____.	____	_____.	____
1230	520 ATTD	41981 WATER FACILITIES , 8" WATER MAIN	83.000 LF	_____.	____	_____.	____
1240	520 ATTD	41982 WATER FACILITIES , 12" GATE VALVE	7.000 EA	_____.	____	_____.	____
1250	520 ATTD	41982 WATER FACILITIES , 12" INSERTING VALVE	2.000 EA	_____.	____	_____.	____
1260	520 ATTD	41982 WATER FACILITIES , 12" TAPPING SLEEVE AND VALVE	3.000 EA	_____.	____	_____.	____
1270	520 ATTD	41982 WATER FACILITIES , 6" GATE VALVE	3.000 EA	_____.	____	_____.	____
1280	520 ATTD	41982 WATER FACILITIES , 8" GATE VALVE	2.000 EA	_____.	____	_____.	____
1290	520 ATTD	41982 WATER FACILITIES , 8" INSERTING VALVE	1.000 EA	_____.	____	_____.	____
1300	520 ATTD	41982 WATER FACILITIES , 8" TAPPING SLEEVE AND VALVE	3.000 EA	_____.	____	_____.	____
1310	ATTD	41982 WATER FACILITIES , CONNECT TO EXISTING W/L (1")	1.000 EA	_____.	____	_____.	____
1320	ATTD	41982 WATER FACILITIES , CONNECT TO EXISTING W/L (12")	1.000 EA	_____.	____	_____.	____

Proposal ID: C000109813C01B Oversight/State Project No.: 0029-000-859, C501, B605
Order No.: L89 Federal Project No.: NONE

Contractor: _____

SECTION: 0001 REGULAR BID ITEMS
Cat Alt Set ID: Cat Alt Mbr ID:

Proposal Line Number	Spec No.	Item ID / Description	Approximate Quantity and Units	Unit Price Dollars	Unit Price Cents	Bid Amount Dollars	Bid Amount Cents
1330	ATTD	41982 WATER FACILITIES , CONNECT TO EXISTING W/L (6")	1.000 EA	_____.	____	_____.	____
1340	ATTD	41982 WATER FACILITIES , CUT & CAP EX. 12" W/L	3.000 EA	_____.	____	_____.	____
1350	ATTD	41982 WATER FACILITIES , CUT & CAP EX. 8" W/L	3.000 EA	_____.	____	_____.	____
1360	520	41982 WATER FACILITIES , FIRE HYDRANT	2.000 EA	_____.	____	_____.	____
1370	520 ATTD	41982 WATER FACILITIES , RELOCATE EX. WATER METER	1.000 EA	_____.	____	_____.	____
1380	520 ATTD	41982 WATER FACILITIES , REMOVE EX. FIRE HYDRANT	2.000 EA	_____.	____	_____.	____
1390	ATTD	49001 SANITARY SEWER REPLACE EXIST. MANHOLE	1.000 EA	_____.	____	_____.	____
1400	701	50108 SIGN PANEL	831.000 SF	_____.	____	_____.	____
1410	700	50436 SIGN POST STP-1, 2 1/2", 12 GAUGE	504.000 LF	_____.	____	_____.	____
1420	700	50485 CONCRETE FOUNDATION STP-1, TYPE A	36.000 EA	_____.	____	_____.	____
1430	510	50600 REMOVE TY.I SIGNS	35.000 EA	_____.	____	_____.	____

Proposal ID: C000109813C01B Oversight/State Project No.: 0029-000-859, C501, B605
Order No.: L89 Federal Project No.: NONE

Contractor: _____

SECTION: 0001 REGULAR BID ITEMS
Cat Alt Set ID: Cat Alt Mbr ID:

Proposal Line Number	Spec No.	Item ID / Description	Approximate Quantity and Units	Unit Price Dollars	Unit Price Cents	Bid Amount Dollars	Bid Amount Cents
1440	ATTD	50610 RELOC. EXIST. SIGN STRUCT. TY. I	36.000 EA	_____.	____	_____.	____
1450	700	51170 ELECTRICAL SERVICE SE-5	5.000 EA	_____.	____	_____.	____
1460	703	51184 TRAFFIC SIGNAL HEAD SECTION 12" LED	97.000 EA	_____.	____	_____.	____
1470	700	51243 CONC FOUNDATION FOR SIGNAL PF-2	6.000 EA	_____.	____	_____.	____
1480	ATTD	51425 SIGNAL POLE , PEDESTAL POLE PF-2, 8'-15'	6.000 EA	_____.	____	_____.	____
1490	ATTD	51425 SIGNAL POLE , TRAF. SIGNAL HEAD SEC. 12" LED BICYCLE	24.000 EA	_____.	____	_____.	____
1500	ATTD	51426 MAST ARM H28-F50	1.000 EA	_____.	____	_____.	____
1510	ATTD	51426 MAST ARM H28-F60	1.000 EA	_____.	____	_____.	____
1520	ATTD	51426 MAST ARM H40-F40	2.000 EA	_____.	____	_____.	____
1530	ATTD	51426 MAST ARM H44-F50	1.000 EA	_____.	____	_____.	____
1540	ATTD	51426 MAST ARM H46-F50	1.000 EA	_____.	____	_____.	____
1550	ATTD	51426 MAST ARM H50-F50	1.000 EA	_____.	____	_____.	____
1560	ATTD	51426 MAST ARM H56-F60	2.000 EA	_____.	____	_____.	____

Proposal ID: C000109813C01B Oversight/State Project No.: 0029-000-859, C501, B605
Order No.: L89 Federal Project No.: NONE

Contractor: _____

SECTION: 0001 REGULAR BID ITEMS
Cat Alt Set ID: Cat Alt Mbr ID:

Proposal Line Number	Spec No.	Item ID / Description	Approximate Quantity and Units	Unit Price Dollars	Unit Price Cents	Bid Amount Dollars	Bid Amount Cents
1570	ATTD	51426 MAST ARM H58-F60	1.000 EA	_____.	____	_____.	____
1580	ATTD	51426 MAST ARM H70-F70	1.000 EA	_____.	____	_____.	____
1590	ATTD	51426 MAST ARM POLE - FOR 40' MAST ARM NR-T40,R,H40,XX	1.000 EA	_____.	____	_____.	____
1600	ATTD	51426 MAST ARM POLE - FOR 50' MAST ARM NR-T50,R,H50,XX	1.000 EA	_____.	____	_____.	____
1610	ATTD	51426 MAST ARM POLE - FOR 58' MAST ARM NR-T58,R,H58,XX	1.000 EA	_____.	____	_____.	____
1620	ATTD	51426 MAST ARM POLE, COMB. MAST ARM - DUAL 44' AND 28' ARMS WITH 9' LUM ARM NR-T44,R,H44,H28,XX	1.000 EA	_____.	____	_____.	____
1630	ATTD	51426 MAST ARM POLE, COMB. MAST ARM - DUAL 55' AND 27' ARM WITH 9' LUM. ARM NR-T56,R,H56,H28,XX	1.000 EA	_____.	____	_____.	____
1640	ATTD	51426 MAST ARM POLE, COMB. MAST ARM - FOR 40' MAST ARM WITH 6' LUMINAIRE ARM NR-T40,R,H40,XX	1.000 EA	_____.	____	_____.	____
1650	ATTD	51426 MAST ARM POLE, COMB. MAST ARM - FOR 45' MAST ARM WITH 6' LUMINAIRE ARM NR-46,R,H46,XX	1.000 EA	_____.	____	_____.	____

Proposal ID: C000109813C01B Oversight/State Project No.: 0029-000-859, C501, B605
Order No.: L89 Federal Project No.: NONE

Contractor: _____

SECTION: 0001 REGULAR BID ITEMS
Cat Alt Set ID: Cat Alt Mbr ID:

Proposal Line Number	Spec No.	Item ID / Description	Approximate Quantity and Units	Unit Price Dollars	Unit Price Cents	Bid Amount Dollars	Bid Amount Cents
1660	ATTD	51426 MAST ARM POLE, COMB. MAST ARM - FOR 55' MAST ARM WITH 10' LUMINAIRE ARM NR-T56,R,H56,XX	1.000 EA	_____	_____	_____	_____
1670	ATTD	51426 MAST ARM POLE, COMB. MAST ARM - FOR 62' MAST ARM WITH 6' LUMAINIRE ARM NR-T70,R,H70,XX	1.000 EA	_____	_____	_____	_____
1680	700	51600 14/2 CONDUCTOR CABLE	4,250.000 LF	_____	_____	_____	_____
1690	700	51603 14/5 CONDUCTOR CABLE	2,500.000 LF	_____	_____	_____	_____
1700	700	51607 14/7 CONDUCTOR CABLE	8,500.000 LF	_____	_____	_____	_____
1710	ATTD	51614 CONDUCTOR CABLE , #6/3 CONDUCTOR CABLE	6,900.000 LF	_____	_____	_____	_____
1720	ATTD	51614 CONDUCTOR CABLE , EMERGENCY PREEMPTION DETECTOR CABLE	1,010.000 LF	_____	_____	_____	_____
1730	ATTD	51614 CONDUCTOR CABLE , THERMAL TRAFFIC DETECTION CABLE	1,400.000 LF	_____	_____	_____	_____
1740	703	51830 HANGER ASSEMBLY SM-3, ONE WAY	40.000 EA	_____	_____	_____	_____
1750	703	51834 HANGER ASSEMBLY SMB-2, ONE WAY	6.000 EA	_____	_____	_____	_____
1760	703	51838 HANGER ASSEMBLY SMB-3, ONE WAY	22.000 EA	_____	_____	_____	_____

Proposal ID: C000109813C01B Oversight/State Project No.: 0029-000-859, C501, B605
Order No.: L89 Federal Project No.: NONE

Contractor: _____

SECTION: 0001 REGULAR BID ITEMS
Cat Alt Set ID: Cat Alt Mbr ID:

Proposal Line Number	Spec No.	Item ID / Description	Approximate Quantity and Units	Unit Price Dollars	Unit Price Cents	Bid Amount Dollars	Bid Amount Cents
1770	703	51945 ILLUMINATED TRAFFIC CONTROL SIGN	1.000 EA	_____.	____	_____.	____
1780	510	51951 INSTALL SIGN	39.000 EA	_____.	____	_____.	____
1790	510 ATTD	51963 REMOVE EXISTING LIGHT POLE FOUNDATION	17.000 EA	_____.	____	_____.	____
1800	510 ATTD	51963 REMOVE & RELOCATE EXISTING CCTV CAMERA AND EQUIPMENT	5.000 EA	_____.	____	_____.	____
1810	510 ATTD	51963 REMOVE EXISTING BIKE SIGNAL HEAD (3-SECTION)	6.000 EA	_____.	____	_____.	____
1820	510 ATTD	51963 REMOVE EXISTING CONTROLLER CABINET & FOUNDATION	5.000 EA	_____.	____	_____.	____
1830	510 ATTD	51963 REMOVE EXISTING LIGHT POLE	17.000 EA	_____.	____	_____.	____
1840	510 ATTD	51963 REMOVE EXISTING MAST ARM	12.000 EA	_____.	____	_____.	____
1850	510 ATTD	51963 REMOVE EXISTING MAST ARM POLE	9.000 EA	_____.	____	_____.	____
1860	510 ATTD	51963 REMOVE EXISTING PEDESTAL POLE	9.000 EA	_____.	____	_____.	____
1870	510 ATTD	51963 REMOVE EXISTING PEDESTAL POLE FOUNDATION	9.000 EA	_____.	____	_____.	____

Proposal ID: C000109813C01B Oversight/State Project No.: 0029-000-859, C501, B605
Order No.: L89 Federal Project No.: NONE

Contractor: _____

SECTION: 0001 REGULAR BID ITEMS
Cat Alt Set ID: Cat Alt Mbr ID:

Proposal Line Number	Spec No.	Item ID / Description	Approximate Quantity and Units	Unit Price Dollars	Unit Price Cents	Bid Amount Dollars	Bid Amount Cents
1880	510 ATTD	51963 REMOVE EXISTING SIGNAL HEAD (3-SECTION)	33.000 EA	_____	.	_____	.
1890	510 ATTD	51963 REMOVE EXISTING SIGNAL POLE FOUNDATION	9.000 EA	_____	.	_____	.
1900	ATTD	51966 TESTING CORROSIVITY	LUMP SUM	LUMP SUM		_____	.
1910	ATTD	52002 TRAFFIC SIGNALIZATION , APS PEDESTRIAN PUSH BUTTON CONTROL UNIT	5.000 EA	_____	.	_____	.
1920	ATTD	52002 TRAFFIC SIGNALIZATION , APS PEDESTRIAN PUSH BUTTON STATION WITH R10-3E	28.000 EA	_____	.	_____	.
1930	ATTD	52002 TRAFFIC SIGNALIZATION , BATTERY BACK-UP UPS FOR TRAFFIC SIGNAL	5.000 EA	_____	.	_____	.
1940	ATTD	52002 TRAFFIC SIGNALIZATION , CONTROLLER	5.000 EA	_____	.	_____	.
1950	ATTD	52002 TRAFFIC SIGNALIZATION , EMERGENCY PREEMPTION DETECTOR CONTROLLER EQUIPMENT	5.000 EA	_____	.	_____	.
1960	ATTD	52002 TRAFFIC SIGNALIZATION , JUNCTION BOX TS4-5.1	22.000 EA	_____	.	_____	.
1970	ATTD	52002 TRAFFIC SIGNALIZATION , JUNCTION BOX TS4-6	10.000 EA	_____	.	_____	.

Proposal ID: C000109813C01B Oversight/State Project No.: 0029-000-859, C501, B605
Order No.: L89 Federal Project No.: NONE

Contractor: _____

SECTION: 0001 REGULAR BID ITEMS
Cat Alt Set ID: Cat Alt Mbr ID:

Proposal Line Number	Spec No.	Item ID / Description	Approximate Quantity and Units	Unit Price Dollars	Unit Price Cents	Bid Amount Dollars	Bid Amount Cents
1980	ATTD	52002 TRAFFIC SIGNALIZATION , OPTICAL DETECTOR	7.000 EA	_____.	____	_____.	____
1990	ATTD	52002 TRAFFIC SIGNALIZATION , THERMAL CAMERA INTERFACE EQUIPMENT	5.000 EA	_____.	____	_____.	____
2000	ATTD	52002 TRAFFIC SIGNALIZATION , THERMAL TRAFFIC DETECTION CAMERA	10.000 EA	_____.	____	_____.	____
2010	ATTD	52002 TRAFFIC SIGNALIZATION CONTROLLER CABINET FOUNDATION CF-2	5.000 EA	_____.	____	_____.	____
2020	703	52403 PEDESTRIAN SIGNAL HEAD SP-8	28.000 EA	_____.	____	_____.	____
2030	704	54020 TYPE A PVMT LINE MRKG 4"	2,394.000 LF	_____.	____	_____.	____
2040	704	54020 TYPE A PVMT LINE MRKG 4"	13,822.000 LF	_____.	____	_____.	____
2050	704	54020 TYPE A PVMT LINE MRKG 4"	2,801.000 LF	_____.	____	_____.	____
2060	704	54020 TYPE A PVMT LINE MRKG 4"	3,381.000 LF	_____.	____	_____.	____
2070	704	54022 TYPE A PVMT LINE MRKG 6"	1,984.000 LF	_____.	____	_____.	____
2080	704	54028 TYPE A PAVEMENT LINE MRKG 24"	3,933.000 LF	_____.	____	_____.	____
2090	704	54032 TYPE B CLASS I PVMT LINE MRKG 4"	201.000 LF	_____.	____	_____.	____

Proposal ID: C000109813C01B Oversight/State Project No.: 0029-000-859, C501, B605
Order No.: L89 Federal Project No.: NONE

Contractor: _____

SECTION: 0001 REGULAR BID ITEMS
Cat Alt Set ID: Cat Alt Mbr ID:

Proposal Line Number	Spec No.	Item ID / Description	Approximate Quantity and Units	Unit Price Dollars	Unit Price Cents	Bid Amount Dollars	Bid Amount Cents
2100	704	54032 TYPE B CLASS I PVMT LINE MRKG 4"	328.000 LF	_____.	____	_____.	____
2110	704	54032 TYPE B CLASS I PVMT LINE MRKG 4"	666.000 LF	_____.	____	_____.	____
2120	704	54032 TYPE B CLASS I PVMT LINE MRKG 4"	1,253.000 LF	_____.	____	_____.	____
2130	704	54032 TYPE B CLASS I PVMT LINE MRKG 4"	154.000 LF	_____.	____	_____.	____
2140	704	54032 TYPE B CLASS I PVMT LINE MRKG 4"	60.000 LF	_____.	____	_____.	____
2150	704	54034 TYPE B CLASS I PVMT LINE MRKG 6"	80.000 LF	_____.	____	_____.	____
2160	704	54034 TYPE B CLASS I PVMT LINE MRKG 6"	1,111.000 LF	_____.	____	_____.	____
2170	704	54042 TYPE B CLASS I PAVE. LINE MARKING 24"	2,495.000 LF	_____.	____	_____.	____
2180	512	54105 ERADICATION OF EXIST. LINEAR PVMT MARKING	6,739.000 LF	_____.	____	_____.	____
2190	704	54217 SNOW PLOW. RAISED PAVE. MARKER ASPH.CONC	24.000 EA	_____.	____	_____.	____
2200	704	54261 PVMT MESSAGE, 8', CHARACTER, TY. B, CL. I	10.000 EA	_____.	____	_____.	____
2210	704	54574 PVMT SYMB MRKG (SGL TURN ARROW) TY B, CL I	13.000 EA	_____.	____	_____.	____

Proposal ID: C000109813C01B Oversight/State Project No.: 0029-000-859, C501, B605
Order No.: L89 Federal Project No.: NONE

Contractor: _____

SECTION: 0001 REGULAR BID ITEMS
Cat Alt Set ID: Cat Alt Mbr ID:

Proposal Line Number	Spec No.	Item ID / Description	Approximate Quantity and Units	Unit Price Dollars	Unit Price Cents	Bid Amount Dollars	Bid Amount Cents
2220	704	54659 PVMT SYMB MRKG (HELMETED BICYCLIST) TY B, CL I	3.000 EA	_____.	____	_____.	____
2230	704	54662 PVMT SYMB MRKG (SHARED LANE) TY A	19.000 EA	_____.	____	_____.	____
2240	700	55140 CONCRETE FOUNDATION LF-1 TY. A	20.000 EA	_____.	____	_____.	____
2250	ATTD	56042 CONDUIT 2" HDPE STREETLIGHT CONDUIT	960.000 LF	_____.	____	_____.	____
2260	ATTD	56042 CONDUIT BORED 3"	1,125.000 LF	_____.	____	_____.	____
2270	ATTD	56042 CONDUIT BORED 4"	1,050.000 LF	_____.	____	_____.	____
2280	ATTD	56042 CONDUIT TRENCHED 1-1/4", STEEL	50.000 LF	_____.	____	_____.	____
2290	ATTD	56042 CONDUIT TRENCHED 2"	700.000 LF	_____.	____	_____.	____
2300	ATTD	56042 CONDUIT TRENCHED 3"	600.000 LF	_____.	____	_____.	____
2310	ATTD	56042 CONDUIT TRENCHED 4"	210.000 LF	_____.	____	_____.	____
2320	700	56200 TRENCH EXCAVATION ECI-1	1,160.000 LF	_____.	____	_____.	____
2330	700	56202 TRENCH EXCAVATION ECI-2	200.000 LF	_____.	____	_____.	____
2340	700	56205 TEST BORE	9.000 EA	_____.	____	_____.	____

Proposal ID: C000109813C01B Oversight/State Project No.: 0029-000-859, C501, B605
Order No.: L89 Federal Project No.: NONE

Contractor: _____

SECTION: 0001 REGULAR BID ITEMS
Cat Alt Set ID: Cat Alt Mbr ID:

Proposal Line Number	Spec No.	Item ID / Description	Approximate Quantity and Units	Unit Price Dollars	Unit Price Cents	Bid Amount Dollars	Bid Amount Cents
2350	ATTD	59000 LIGHTING LUMINAIRE TYPE PT DUAL	24.000 EA	_____.	____	_____.	____
2360	ATTD	59000 LIGHTING LUMINAIRE TYPE PT SINGLE	1.000 EA	_____.	____	_____.	____
2370	ATTD	59000 LIGHTING , CONCRETE FOUNDATION F-1	23.000 EA	_____.	____	_____.	____
2380	ATTD	59000 LIGHTING , NON-METALLIC EXPANSION/DEFLECTION COUPLINGS	6.000 EA	_____.	____	_____.	____
2390	ATTD	59000 LIGHTING , PUBLIC ART CONTROLLER CABINET	1.000 EA	_____.	____	_____.	____
2400	ATTD	59000 LIGHTING , REMOVE EXISTING JUNCTION BOX	16.000 EA	_____.	____	_____.	____
2410	ATTD	59000 LIGHTING , REMOVE EXISTING LUMINAIRES	25.000 EA	_____.	____	_____.	____
2420	ATTD	59000 LIGHTING ELECTRICAL SERVICE STREETLIGHT, PUBLIC ART, AND BUS SHELTER	3.000 EA	_____.	____	_____.	____
2430	ATTD	59000 LIGHTING JOINT USE ORNAMENTAL LIGHTING AND TRAFFIC POLE	20.000 EA	_____.	____	_____.	____
2440	ATTD	59000 LIGHTING JUNCTION BOX - LARGE	18.000 EA	_____.	____	_____.	____
2450	ATTD	59000 LIGHTING JUNCTION BOX - SMALL	13.000 EA	_____.	____	_____.	____

Proposal ID: C000109813C01B Oversight/State Project No.: 0029-000-859, C501, B605
Order No.: L89 Federal Project No.: NONE

Contractor: _____

SECTION: 0001 REGULAR BID ITEMS
Cat Alt Set ID: Cat Alt Mbr ID:

Proposal Line Number	Spec No.	Item ID / Description	Approximate Quantity and Units	Unit Price Dollars	Unit Price Cents	Bid Amount Dollars	Bid Amount Cents
2460	ATTD	59000 LIGHTING LUMINAIRE TYPE CH - COBRA LED	6.000 EA	_____.	____	_____.	____
2470	ATTD	59000 LIGHTING LUMINAIRE TYPE PT DUAL - FURNISH TO TRAFFIC SIGNAL	12.000 EA	_____.	____	_____.	____
2480	ATTD	59000 LIGHTING LUMINAIRE TYPE PT SINGLE - FURNISH TO TRAFFIC SIGNAL	8.000 EA	_____.	____	_____.	____
2490	ATTD	59000 LIGHTING STREETLIGHT POLE CARLYLE ALUMINUM STANDARD	25.000 EA	_____.	____	_____.	____
2500	ATTD	59001 LIGHTING , #4 AWG STRANDED CU CONDUCTOR	16,000.000 LF	_____.	____	_____.	____
2510	ATTD	59001 LIGHTING , #6 AWG STRANDED CU CONDUCTOR	3,100.000 LF	_____.	____	_____.	____
2520	ATTD	59001 LIGHTING , 2" PVC SCHEDULE 40 CONDUIT	5,300.000 LF	_____.	____	_____.	____
2530	ATTD	59001 LIGHTING , REMOVE OF EXISTING UNDERGROUND CONDUIT	3,200.000 LF	_____.	____	_____.	____
2540	ATTD	59003 LIGHTING TEMPORARY LIGHTING FOR ROADWAYS, CROSSWALKS, AND BIKE TRAIL	LUMP SUM	LUMP SUM		_____.	____
2550	ATTD	59050 COMMUNICATION EQUIP. , CORETEC UNIVERSAL DIGITAL VIDEO CODEC	3.000 EA	_____.	____	_____.	____

Proposal ID: C000109813C01B Oversight/State Project No.: 0029-000-859, C501, B605
Order No.: L89 Federal Project No.: NONE

Contractor: _____

SECTION: 0001 REGULAR BID ITEMS
Cat Alt Set ID: Cat Alt Mbr ID:

Proposal Line Number	Spec No.	Item ID / Description	Approximate Quantity and Units	Unit Price Dollars	Unit Price Cents	Bid Amount Dollars	Bid Amount Cents
2560	ATTD	59050 COMMUNICATION EQUIP. , FACTORY TERMINATED PATCH PANEL ASSY - 50 FT	2.000 EA	_____	.	_____	.
2570	ATTD	59050 COMMUNICATION EQUIP. , FACTORY TERMINATED PATCH PANEL ASSY - 75 FT	1.000 EA	_____	.	_____	.
2580	ATTD	59050 COMMUNICATION EQUIP. , FACTORY TERMINATED PATCH PANEL ASSY -150 FT	2.000 EA	_____	.	_____	.
2590	ATTD	59050 COMMUNICATION EQUIP. , FIBER SPLICE	20.000 EA	_____	.	_____	.
2600	ATTD	59050 COMMUNICATION EQUIP. , FIBER SPLICE ENCLOSURE (MEDIUM)	5.000 EA	_____	.	_____	.
2610	ATTD	59050 COMMUNICATION EQUIP. , MANAGED ETHERNET SWITCH	5.000 EA	_____	.	_____	.
2620	510 ATTD	59060 COMMUNICATION EQUIP. , RELOCATE EXISTING DMS CABINET	LUMP SUM	LUMP SUM		_____	.
2630	PLAN	62417 JT SEALER (CL.1) 1 1/4"	102.000 LF	_____	.	_____	.
2640	PLAN	62417 JT SEALER (CL.1) 1 5/8"	190.000 LF	_____	.	_____	.
2650	PLAN	67400 DECK DRAINAGE SYSTEM	LUMP SUM	LUMP SUM		_____	.
2660	413	67900 DISM.& REM. EX. STR. NO. 5059 (PORTION OF)	LUMP SUM	LUMP SUM		_____	.

Proposal ID: C000109813C01B Oversight/State Project No.: 0029-000-859, C501, B605
Order No.: L89 Federal Project No.: NONE

Contractor: _____

SECTION: 0001 REGULAR BID ITEMS
Cat Alt Set ID: Cat Alt Mbr ID:

Proposal Line Number	Spec No.	Item ID / Description	Approximate Quantity and Units	Unit Price Dollars	Unit Price Cents	Bid Amount Dollars	Bid Amount Cents
2670	PLAN	68011 PARAPET MODIFIED	102.000 LF	_____.	____	_____.	____
2680	404	68040 CONCRETE CLASS A4	67.900 CY	_____.	____	_____.	____
2690	PLAN	68042 CONCRETE CLASS A3	47.900 CY	_____.	____	_____.	____
2700	406	68091 CORROSION RESISTANT REINF. STEEL CL. I	5,980.000 LB	_____.	____	_____.	____
2710	406	68093 CORROSION RESISTANT REINF. STEEL CL. III	5,720.000 LB	_____.	____	_____.	____
2720	412	68172 CRACK REPAIR TYPE B	20.000 LF	_____.	____	_____.	____
2730	PLAN	68492 MATERIAL DISPOSAL (STR. NO. 5059)	LUMP SUM	LUMP SUM		_____.	____
2740	412	68570 EXPANSION JOINT REMOVAL	171.000 LF	_____.	____	_____.	____
2750	PLAN	68908 SUPERSTR. WID./REPAIR , PRECAST CONCRETE FASCIA PANEL	LUMP SUM	LUMP SUM		_____.	____
2760	PLAN	68908 SUPERSTR. WID./REPAIR , STAINLESS STEEL PLATES/GRATES	LUMP SUM	LUMP SUM		_____.	____
2770	412 ATTD	68908 SUPERSTR. WID./REPAIR , TEMPORARY DEBRIS SHIELD	LUMP SUM	LUMP SUM		_____.	____
2780	ATTD	68910 SUPERSTR. WID./REPAIR 12"X12" INTERLOCKING CONCRETE PAVERS ON EXISTING BRIDGE	39.000 SY	_____.	____	_____.	____

Proposal ID: C000109813C01B Oversight/State Project No.: 0029-000-859, C501, B605
Order No.: L89 Federal Project No.: NONE

Contractor: _____

SECTION: 0001 REGULAR BID ITEMS
Cat Alt Set ID: Cat Alt Mbr ID:

Proposal Line Number	Spec No.	Item ID / Description	Approximate Quantity and Units	Unit Price Dollars	Unit Price Cents	Bid Amount Dollars	Bid Amount Cents
2790	ATTD	68910 SUPERSTR. WID./REPAIR 12"X12" INTERLOCKING CONCRETE PAVERS ON PROPOSED BRIDGE	49.000 SY	_____	.	_____	.
2800	ATTD	68910 SUPERSTR. WID./REPAIR SCORE EXISTING BRIDGE SIDEWALK 48"X48"	74.000 SY	_____	.	_____	.
2810	401	69009 POROUS BACKFILL	104.000 CY	_____	.	_____	.
2820	401	69010 PIPE UNDERDRAIN 6"	244.000 LF	_____	.	_____	.
2830	401	69011 STRUCTURE EXCAVATION	959.000 CY	_____	.	_____	.
2840	402	69012 TEMPORARY SHEET PILING	2,283.000 SF	_____	.	_____	.
2850	412	69030 CONCRETE CLASS A3	434.000 CY	_____	.	_____	.
2860	412	69040 CONCRETE CLASS A4	27.800 CY	_____	.	_____	.
2870	PLAN	69070 PARAPET MODIFIED	166.000 LF	_____	.	_____	.
2880	406	69093 CORROSION RESISTANT REINF. STEEL CL. III	5,860.000 LB	_____	.	_____	.
2890	406	69100 REINF. STEEL	59,370.000 LB	_____	.	_____	.
2900	412	69500 CONCRETE SUBSTRUCT. SURFACE REPAIR	11.000 SY	_____	.	_____	.
2910	406	69507 WELDED WIRE FABRIC	80.000 LB	_____	.	_____	.

Proposal ID: C000109813C01B Oversight/State Project No.: 0029-000-859, C501, B605
Order No.: L89 Federal Project No.: NONE

Contractor: _____

Section: 0001 Total: _____._____

Total Bid: _____._____

Determination of Major Items

Item Number	Item Description
41981	WATER FACILITIES , 12" WATER MAIN

ORDER NO.: L89
CONTRACT ID. NO.: C000109813C01B

TABLE OF CONTENTS FOR PROVISIONS

FORMS and SCHEDULE OF ITEMS PRECEDE SPCNs, SPs and SUPPLEMENTAL SPECS.

CN100-000026-01 GEN. PROJ. REQUIRE., SSS/SPS/SPCNS (IMPERIAL) 5-15-17 (SPCN) 1
CN105-060100-00 SEC. 105.06—SUBCONTRACTING R-7-12-16 (SPCN) 2
CN302-030100-00 SEC. 302.03(B) **PRECAST DRAINAGE STRUCT.** R-7-12-16 (SPCN) 2
CN315-000100-00 SEC. 315.05(C) **PLACING AND FINISHING** 1-18-17 (SPCN) 3
CN518-020100-00 SEC. 518.02(A) **NUMBER OF TRAINEES** 7-12-16 (SPCN) 3
CN700-030100-01 SEC. 700.03—GEN. REQUIREMENTS (SIGN/LIGHT/POLE) 7-25-16 (SPCN) 4
NEGOTIATION WITH THE LOWEST SOLE BIDDER 7-12-16_(SPCN) 4
UNIFORMED FLAGGERS R-7-12-16_(SPCN) 5
SEC. 512—MAINTAINING TRAFFIC (ID STAMP/ENGRAVE G'RAIL/ATTEN) R-7-12-16_(SPCN) 5
CN108-040130-00 SUBSTANTIAL COMP. INCENT./DISINCENT. I-10-5-16 (SPCN) 6
SECTION 105.01 - PRECONSTRUCTION CONFERENCE 2-3-17 (SPCN) 7
SECTION 105.07 - COOPERATION OF CONTRACTOR 2-3-17 (SPCN) 7
SECTION 105.16 - CLEANUP FEBRUARY 3, 2017 (SPCN) 8
SECTION 204.02 – DETAIL REQUIREMENTS 1-20-17 (SPCN) 8
SECTION 303.06 – MEASUREMENT AND PAYMENT 1-20-17 (SPCN) 8
SECTION 315 – ASPHALT CONCRETE PLACEMENT 1-23-17 (SPCN) 9
SECTION 315.05 (H) SAW-CUT ASPHALT PAVEMENT 1-23-17 (SPCN) 9
SECTION 502.03 (D) SAW CUT HYDRAULIC CEMENT CONCRETE ITEMS 1-23-17 (SPCN) 10
SECTION 502.04 – MEASUREMENT AND PAYMENT 2-6-17 (SPCN) 10
SECTION 504 – SIDEWALKS, STEPS, AND HANDRAILS 8-3-17 (SPCN) 11
SECTION 507.03 (D) - HIGH VISIBILITY FENCES 1-23-17 (SPCN) 11
SECTION 508.01 – DESCRIPTION 1-23-17 (SPCN) 11
SECTION 512 - MAINTAINING TRAFFIC 2-3-17 (SPCN) 12
SECTION 601 – SELECTIVE TREE REMOVAL, TRIMMING, AND CLEANUP 1-23-17 (SPCN) 12
CONDUITS 2-3-17 (SPCN) 13
EXISTING PAVER SIDEWALK 2-6-17 (SPCN) 13
LIGHTING WORK 2-3-17 (SPCN) 14
PEDESTRIAN SHORT AND TALL FENCE 2-15-17 (SPCN) 14
PUBLIC ART CONSTRUCTION 9-28-17 (SPCN) 15
TEMPORARY LIGHTING 2-8-17 (SPCN) 16
SP102-010100-00 NON-DISCRIMIN. EMPLOY. & CONTRACT. PRACTICES (EO-61) 1-10-17 17
SP105-000100-00 INFORMAL PARTNERING R-7-12-16 18
SP107-000110-00 C-45–SWPPP GEN. PERMIT–CONTRACTOR CERTIFICATION R-10-27-16 20
SP108-000120-00 CPM PROGRESS FOR SCHEDULE CAT. III PROJ. R-7-12-16 21
SP109-000100-02 ASPHALT MATERIAL PRICE ADJUSTMENT 4-28-17 38
SP109-000110-00 OPTIONAL ADJUSTMENT FOR FUEL R-7-12-16 42
SP109-000120-00 PRICE ADJUSTMENT FOR STEEL R-7-12-16 44
SP302-000100-00 RESTORING EXISTING PAVEMENT 7-12-16 52
SP302-000120-00 JACK AND BORE 10-27-16 54
SP302-000140-01 PIPE REHABILITATION 11-7-16 59
SP305-000100-01 SHOULDER RENOVATION 10-3-16 71
SP505-000100-00 REPLACE G'RAIL, MED. BARRIER & G'RAIL TO BRIDGE 8-4-16 75
SP512-030100-00 POLICE ASSIST. FOR PAVING OPERATIONS R-7-12-16 81
SP700-000180-01 MODIFICATIONS TO AASHTO'S SIGN STRUCT. SPEC. 7-25-16 82
SP703-000100-00 MAST ARM HANGER ASSEMBLY STD SM-3 & SMD-2 I-7-12-16 86
SEC. 105.06–SUBCONTRACTING (STATE FUNDED PROJECTS) 2-9-17 93
SEC. 107.15—USE OF SWAM BUSINESSES R-7-12-16 94
SS107-002016-04 SEC. 107—LEGAL RESPONSIBILITIES 8-10-17 96

ORDER NO.: L89
CONTRACT ID. NO.: C000109813C01B

SS242-002016-01	**SEC. 242—FENCES** 2-1-17	101
SS245-002016-04	**SEC. 245—GEOSYNTHETICS & LOW PERM. LINERS** 2-6-17	102
SS303-002016-02	**SEC. 303—EARTHWORK** 1-17-17	104
SS505-002016-02	**SEC. 505—GUARDRAIL & W-BEAM MEDIAN BARRIERS** 3-15-17	106
SS704-002016-02	**SEC. 704—PAVEMENT MARKINGS AND MARKERS** 2-3-17	108
	SECTION 105.08 - COOPERATION WITH REGARD TO UTILITIES 1-23-17	110
	SECTION 108.02 – LIMITATION OF OPERATIONS 2-7-17	112
	SECTION 412 - WIDEN REPAIRI, AND RECONSTRUC EXIST STRUCTURES 1-23-17	122
	SECTION 502 – INCIDENTAL CONCRETE ITEMS 1-24-17	123
	SECTION 504 – SIDEWALKS, STEPS, AND HANDRAILS 1-24-17	125
	SECTION 505 - GUARDRAIL AND W-BEAM MEDIAN BARRIER 1-23-17	127
	SECTION 510 - RELOCATING OR MODIFYING EXISTING ITEMS 3-27-17	128
	SECTION 517 - CONTRACTOR CONSTRUCTION SURVEYING 2-3-17	133
	ARLINGTON COUNTY WATER MAINS & APPURTENANCES 3-14-17	135
	CORROSIVITY TESTING 1-26-17	150
	EXTERIOR PLANTS 3-6-17	151
	INTERLOCKING CONCRETE PAVERS 3-6-17	159
	INSPECT EXISTING UNDERDRAIN 1-23-17	163
	IRRIGATION SYSTEM 2-16-17	165
	LANDSCAPE DEFINITIONS 2-20-17	169
	PLANTING PREPARATION 3-6-17	170
	RAISED CONCRETE PLANTER 1-24-17	177
	ROCK EXCAVATION IN OPEN EXCAVATIONS 1-24-17	178
	SEEDING AND SODDING 3-20-17	180
	TREE GRATE 2-23-17	187
	TREE PROTECTION 2-24-17	188
	VERIFYING EXISTING UTILITY LOCATIONS 8-3-17	192
	STREETLIGHT CONSTRUCTION 3-15-17	194
	STREETLIGHT FOUNDATIONS 8-3-17	196
	STREETLIGHT JUNCTION BOXES 8-3-17	198
	UNDERGROUND CONDUCTOR 3-27-17	200
	STREETLIGHT CONDUIT 3-15-17	202
	STREETLIGHT, PUBLIC ART, AND BUS SHELTER ELECTRICAL SERVICE 4-26-17	204
	PUBLIC ART CONTROLLER CABINET 3-27-17	206
	STREETLIGHT POLE 8-3-17	207
	STREETLIGHT LUMINAIRES 8-3-17	208
	TRAFFIC SIGNAL INSTALLATION 3-14-17	210
	SIGNAL JUNCTION BOXES 3-27-17	214
	MAST ARM POLES 3-27-17	216
	SIGNAL CONDUIT 3-14-17	224
	TRAFFIC CABLES 3-14-17	228
	SIGNAL FOUNDATIONS 3-14-17	231
	ACCESSIBLE PUSHBUTTON SYSTEM 3-14-17	233
	EMERGENCY VEHICLE PREEMPTION SYSTEMS 3-14-17	236
	TRAFFIC SIGNAL CONTROL CABINETS 3-27-17	238
	TRAFFIC SIGNAL CONTROLLERS 3-15-17	242
	UNINTERRUPTIBLE POWER SUPPLY 3-15-17	243
	THERMAL VIDEO DETECTION CAMERAS 3-15-17	249
	PUBLIC ART 9-28-17	251
	ARLINGTON COUNTY SANITARY SEWERS & APPURTENANCES 1-30-17	252
	FIBER OPTICS 3-31-17	257
	JOINT-USE ORNAMENTAL LIGHTING AND TRAFFIC POLE 4-26-17	263
	NUTRIENT CREDITS SALE CERTIFICATION	264
	PERMIT (2 PAGES)	265

cn100-000026-01 **GENERAL PROJECT REQUIREMENTS, SUPPLEMENTAL SPECIFICATIONS (SSs), SPECIAL PROVISIONS (SPs) AND SPECIAL PROVISION COPIED NOTES (SPCNs)**

This project shall be constructed according to: the plans; the *Virginia Department of Transportation Road and Bridge Specifications*, dated 2016 and the Supplement thereto, dated 2017; the *Virginia Department of Transportation Road and Bridge Standards*, dated 2016; the 2011 edition of the *Virginia Work Area Protection Manual with Revision Number 1* incorporated, dated April 1, 2015; the 2009 edition of the *MUTCD with Revision Numbers 1 and 2* incorporated, dated May 2012; and the 2011 edition of the *Virginia Supplement to the MUTCD with Revision Number 1* dated September 30, 2013; and the Supplemental Specifications, Special Provisions and Special Provision Copied Notes in this contract. The status in the Contract of each of these documents will be according to Section 105.12 of the Specifications.

Special Provision Copied Notes in this contract are designated with "(SPCN)" after the date.

The information at the top and left of each Special Provision Copied Note in this contract is file reference information for Department use only. The information in the upper left corner above the title of each Supplemental Specification and Special Provision in this contract is file reference information for Department use only.

The Department has identified the system of measurement to be used on this particular project as imperial. Any imperial unit of measure in this contract with an accompanying expression in a metric unit will be referred to hereinafter as a "dual unit" measurement. Such a "dual unit" measurement is typically expressed first in the imperial unit followed immediately to the right by the metric unit in parenthesis "()" or brackets "[]" where parenthesis is used in the sentence to convey other information. Where a "dual unit" of measure appears in this project, only the imperial unit will apply. The accompanying metric unit shown is not to be considered interchangeable and mathematically convertible to the imperial unit and shall not be used as an alternate or conflicting measurement.

5-15-17_(SPCN)

cn105-060100-00 **SECTION 105.06—SUBCONTRACTING** of the Specifications is amended to replace the first paragraph with the following:

No portion of the Contract shall be subcontracted or otherwise disposed of without the written consent of the Engineer, except for work that is $25,000 or less per subcontractor, where the cumulative total of the sublets not requiring the Engineer's written consent will not exceed 10 percent of the original contract value. This will not, however, waive the requirements for prequalification, and will be considered part of the percentage the Contractor is allowed to subcontract. The Contractor shall notify the Engineer of the name of the firm to whom the work will be subcontracted, and the amount and items of work involved. Such notification shall be made and verbal approval given by the Engineer prior to the subcontractor beginning work.

5-15-08; Reissued 7-12-16 (SPCN)

cn302-030100-00 **SECTION 302.03**(b) **PRECAST DRAINAGE STRUCTURES** of the Specifications is amended to include the following:

Precast units, excluding concrete pipe, prestressed concrete items and soundwalls, conforming to the requirements herein will only be accepted under a Quality Control/Quality Acceptance Program (QC/QA). The Contractor shall have the producer perform quality control functions according to a Department approved QC/QA plan. Each piece, manufactured under the QC/QA program, in addition to the date and other required markings, shall be stamped with the letters (QC), as evidence that the required QC/QA procedures have been performed. Each shipping document shall be affixed with the following:

We certify that these materials have been tested and conform to VDOT Precast Concrete Products Quality Assurance Program

_____
Signature and Title

1-14-08; Reissued 7-12-16 (SPCN)

cn315-000100-00 **SECTION 315.05**(c) **PLACING AND FINISHING** is modified by replacing the third paragraph with the following:

> The longitudinal joint in one layer shall offset that in the layer immediately below by approximately 6 inches or more. The joint in the wearing surface shall be offset 6 inches to 12 inches from the centerline of the pavement if the roadway comprises two traffic lanes. The joint shall be offset approximately 6 inches from the lane lines if the roadway is more than two lanes in width. The longitudinal joint shall be uniform in appearance. On all roads except secondary routes, if the offset for the longitudinal joint varies from a straight line more than 2 inches in 50 feet on tangent alignment, or from a true arc more than 2 inches in 50 feet on curved alignment, the Contractor shall seal the joint using a water-proof sealer at no cost to the Department. The Contractor shall recommend a sealant and installation procedure to the Engineer for approval before proceeding. On all roads except secondary routes, if the offset for the longitudinal joint varies from a straight line more than 3 inches in 50 feet on tangent alignment, or from a true arc more than 3 inches in 50 feet on curved alignment, the Engineer may reject the paving. The Engineer will not require offsetting layers when adjoining lanes are paved in echelon and the rolling of both lanes occurs within 15 minutes after laydown.

1-18-17 (SPCN)

cn518-020100-00 **SECTION 518.02**(a) **NUMBER OF TRAINEES** is amended to replace the first sentence of the first paragraph with the following:

> The number of trainees for this contract shall be **4.**

7-12-16 (SPCN)

cn700-030100-01 **SECTION 700.03—GENERAL REQUIREMENTS** of the Specifications is amended as follows:

Section 700.03(a) **Sign Structures** is amended by replacing the first paragraph with the following:

Overhead Sign and Dynamic Message Sign (DMS) Structures (Span, Cantilever, Butterfly, etc.) shall be fabricated from galvanized steel material as specified herein. Aluminum structures will not be allowed. All overhead sign structures having a single pole, or a single pole at each end, shall have a minimum of eight 2-inch diameter (minimum) anchor bolts. Structures with more than one pole at each end shall have a minimum of four 2-inch diameter (minimum) anchor bolts per pole. Washers are required above and below the base plate. Tubular pole shafts shall have a removable cap fastened by at least three screws.

Section 700.03(b)1 **High Mast Lighting Structures** is replaced with the following:

High Mast Lighting Structures (Lengths of 55 feet or greater) shall be galvanized steel and shall have at least twelve 2-inch diameter (minimum) anchor bolts. Aluminum structures will not be allowed. Washers are required above and below the base plate.

Section 700.03(c)1 **Mast Arm Signal Poles** is amended by replacing the fourth paragraph with the following:

Type A and Type D mast arm signal poles shall have a round base plate designed for a minimum of six 2-inch diameter anchor bolts equally spaced on the bolt circle. All other mast arm signal poles shall have a round base plate designed for a minimum of eight 2-inch diameter anchor bolts equally spaced on a minimum 24-inch bolt circle. The upper ends of anchor bolts shall be threaded and furnished with nuts for pole attachment in accordance with Section 700.05(k) of the Specifications.

7-25-16 (SPCN)

NEGOTIATION WITH THE LOWEST SOLE BIDDER — In the event the Department receives a single responsive and responsible bid that exceeds available funds, the agency may negotiate with that sole bidder to obtain a contract price within available funds in accordance with the provisions of §2.2-4318 of the Code of Virginia. For the purpose of determining when such negotiations may take place, the term "available funds" shall mean those funds, which were budgeted by the agency for this Contract prior to the issuance of the written Invitation for Bids for the same. Negotiations with the sole bidder may include a change in requirements; including price(s). The agency shall initiate such negotiations by written notice to the sole bidder that its bid exceeded the available funds and that the agency wishes to negotiate a lower contract price within the designated available funds. The time, place, and manner of negotiating shall be agreed to by the agency and the sole bidder.

7-12-16_(SPCN)

UNIFORMED FLAGGERS - The Contractor shall utilize off-duty uniformed police officers for control of traffic through signalized intersections during periods when the control equipment is non-operational. It is expressly understood that the work under this pay item exceeds the requirements and duties typically associated with flagger service. Off duty police officers will not be required to have VDOT flagger certification to perform this work. Police assisted flagger service will be measured and paid for in hours of in duty service. This price will be full compensation for furnishing uniform officers and all associated costs.

Payment will be made under:

Pay Item	**Pay Unit**
Uniformed Flaggers	Hours

9-29-08; Reissued 7-12-16_(SPCN)

SECTION 512—MAINTAINING TRAFFIC is amended as follows:

Section 512.03(h)1 **Guardrail barrier service and terminal treatments** is amended to replace the last sentence with the following:

All end terminals used in conjunction with guardrail barrier service shall be from manufacturers on the Materials Division's Approved Products List No. 12 and the VDOT NCHRP 350 or MASH approved list linked in List No. 12. New Guardrail Terminals (GR-7 & GR-9) shall be permanently identified in a location readily visible for inspection that is not susceptible to damage by stamping or engraving. The identification shall include Manufacturer, Date and Site of Manufacture, and Model Number.

Section 512.03(i) **Impact Attenuator Service**, the first paragraph, is amended to replace the last sentence with the following:

New impact attenuators shall be permanently identified in a location readily visible for inspection that is not susceptible to damage by stamping or engraving. The identification shall include Manufacturer, Date and Site of Manufacture, and Model Number.

Section 512.03(r) **Truck-mounted or trailer-mounted attenuators**, the second paragraph, is amended to replace the last sentence with the following:

New truck-mounted and trailer-mounted attenuators shall be permanently identified in a location readily visible for inspection that is not susceptible to damage by stamping or engraving. The identification shall include Manufacturer, Date and Site of Manufacture, and Model Number.

3-18-16; Reissued 7-12-16_(SPCN)_

cn108-040130-00 **SUBSTANTIAL COMPLETION INCENTIVE/DISINCENTIVE**

The following terms are defined for this Specification only:

- **Substantial Completion** is defined as completing all work necessary to sufficiently complete the project to a point such that it can be safely and effectively used by the public or the Department for the purposes intended without delays, disruption, further lane closures, or other impediments and only clean up and Work of a minor nature, as agreed to by the Engineer, remains to be finished.

- **Substantial Completion Date** is the date on or before which all work required for Substantial Completion must be completed such that the Contractor receives an incentive. Otherwise, a disincentive is assessed each day thereafter the Substantial Completion requirements are not met.

- **Maximum Incentive Date** is the latest date Substantial Completion must be achieved such that the Contractor receives the maximum possible incentive.

- **Total Float** is the number of working days that an activity can be delayed before it delays a related contract interim milestone or the project, as applicable.

The Substantial Completion Date for this project is **June 14, 2019**. The Department will pay an incentive of **$4,000** per Calendar Day the Contractor achieves the Substantial Completion requirements before the Substantial Completion Date. The incentive is capped at **$240,000**, if the Substantial Completion requirements are met on or before the Maximum Incentive Date. Delays resulting from weather, the Contractor's actions, or actions of others within the Contractors' control or influence will not be considered grounds to modify the Maximum Incentive Date or Substantial Completion Date, as applicable. The incentive will be paid as part of the next payment due to the Contractor by the Department.

If the Contractor does not achieve Substantial Completion on or before the Substantial Completion Date, the Department will assess a disincentive of **$4,000** per Calendar Day after the Substantial Completion Date that the Contractor does not achieve Substantial Completion, including Sundays and Holidays.

The disincentive will be assessed, not as a penalty, but as agreed compensation for damages resulting from the Contractor's delay. The disincentive amount is calculated based on Department related traffic control and maintenance costs, detour costs, and daily road user costs, as applicable.

The Contractor waives any defense as to the validity of any disincentives stated in the Contract, the Specifications, or this Special Provision, and assessed by the Department against the Contractor on the grounds that such disincentives are void as penalties or are not reasonably related to actual damages.

Any liquidated damages assessed in accordance with Section 108.06 of the Specifications will be in addition to the disincentive specified herein.

The Contractor shall declare in writing, at the time of the Baseline Progress Schedule submission, its intended date for completion of the Work. The Contractor shall designate the Critical Path activities driving the Substantial Completion Date, as reflected on the Baseline Progress Schedule. The Contractor shall also identify in the Baseline Progress Schedule, each applicable milestone activity, as defined herein, which includes, but is not limited to: the Maximum Incentive Date, the Substantial Completion Date, and the date the Contractor expects to achieve Substantial Completion.

If the Contractor determines it may have experienced an excusable delay, it may seek a time extension in accordance with Section 108.04 by submitting a request that includes a Schedule Impact Analysis (SIA) conforming to Section 108.03. The Engineer will evaluate the Contractor's request and SIA based on the Critical Path and available Total Float. Total Float shall be calculated according to Section 108.03 or the Progress Schedule Special Provision.

5-18-16; Issued 10-5-16 (SPCN)

SECTION 105.01 - PRECONSTRUCTION CONFERENCE is amended to include the following:

The Contractor shall hold a preconstruction meeting with the general manager of Waterview Property and Marriott Property to discuss scheduling and staging of the work prior to mobilizing to the site.
Key Bridge Marriot Contact:

Brian Hilger, General Manager
1401 Lee Highway Arlington VA 22209
240 284 1461

Waterview Contact:
Michael J. Thorne, The JBG Companies®
4445 Willard Avenue, Suite 400 | Chevy Chase, Maryland 20815
240.333.3767

2-3-17 (SPCN)

SECTION 105.07 - COOPERATION OF CONTRACTOR is amended to include the following:

The Contractor shall notify Arlington County Transit in writing at okotov@arlingtonva.us or by phone at 703-228-3049 or 703-517-5412 a minimum of two-weeks before any work that will impact existing bus service so that the County can arrange closure and/or relocation of the bus stops. The Contractor shall provide the Engineer such notification in writing at the same time as the notification is provided to Arlington County Transit.

Arlington County Transit Staff will be responsible for providing signage and notification of service disruptions. Any deviations from the planned service disruptions shall be submitted to the Engineer and Arlington County Transit at least forty eight (48) hours before the scheduled service interruption.

The Contractor shall pick up the Arlington County Transit signs and post them for duration of the work period within the project limits and at the end of work zones. The Contractor shall contact Arlington County Bus Stop Manager, Oleg Kotov, to schedule pick-up. Mr. Kotov can be reached at (703) 228-3049 or (703) 517-5412.

The cost of this work shall be included in the contract unit prices of appropriate Maintaining Traffic items.

2-3-17 (SPCN)

SECTION 105.16 - CLEANUP is amended to include the following:

The Contractor shall maintain a safe and clean job site in a neat, orderly, and workmanlike appearance throughout construction. The Contractor shall remove and legally dispose of, as frequently as necessary, all refuse, rubbish, scrap materials and debris from the site to the extent they are the result of the Contractor's operations. Landscaping shall be restored and sidewalks swept as needed. At completion of the Work, but before Final Acceptance, the Contractor shall remove and legally dispose of all surplus material, falsework, temporary structures including foundations, and debris of any nature resulting from the Contractor's operations or resulting from any activity related to the Contractor's operations such that the site is in a neat, orderly condition. If the Contractor fails to do so, the County shall have the right to remove and legally dispose of the surplus material, falsework, temporary structures including foundations, and debris, put the site in a neat, orderly condition, and charge the cost to the Contractor. The job site shall be left in as good or better condition than it was before construction.

2-3-2017 (SPCN)

SECTION 204.02 – DETAIL REQUIREMENTS is amended to include the following:

(e) **Aggregate No. 57 Double Washed** shall be washed twice, conform to Section 203 of the Specifications and the following.

The quantity of material passing the No. 200 sieve shall not exceed 1.00% by weight using AASHTO test method T11.

1-20-17 (SPCN)

SECTION 303.06 – MEASUREMENT AND PAYMENT is amended as follows:

Section 303.06 (a) 1. Regular excavation is amended to include the following:

Excavation in excess of that shown on the plans will not be paid for unless specifically approved in advance in writing by the Engineer.

Section 303.06 (a) 2. Borrow excavation is amended to include the following:

Borrow excavation will be measured in place or as approved by the Engineer.

1-20-17 (SPCN)

SECTION 315 – ASPHALT CONCRETE PLACEMENT is amended as follows:

Section 315.01 – Description is amended to include the following:

This work shall also consist of constructing a 2" SM-9.5A asphalt concrete surface course for a temporary trail and temporary sidewalk.

Section 315.05 – Procedures is amended to include the following:

(i) The Contractor shall furnish, place, and compact 2" of SM-9.5A asphalt concrete for a Temporary Trail at the locations and width shown on the plans. The Contractor shall also construct a minimum six-foot-wide temporary asphalt concrete sidewalk where existing sidewalk is demolished and new sidewalk has not yet been constructed. The temporary asphalt sidewalk shall be 2-inch thick compacted asphalt cement. The temporary trail and sidewalk surface shall be smooth and free of ruts. The Contractor shall remove the temporary asphalt concrete as necessary to construct the improvements.

1-23-17 (SPCN)

SECTION 315.05 (h) SAW-CUT ASPHALT PAVEMENT is amended to include the following:

The Contractor shall use a power saw to cut asphalt pavement as shown on the plans or as directed by the Engineer. Power saws and diamond or abrasive blades shall be designed for such work. The saw shall be capable of saw cutting horizontally and at varying degrees of pitch to match the slopes of the adjacent curb or pavement. The saw shall also be capable of saw cutting the material to remain by back cutting.

Unless otherwise noted, the depth of the saw cut shall be for the full depth of the asphalt pavement. After the curb has been cut to its full thickness, the Contractor shall remove existing pavement removed with pry bars or another method acceptable to the Engineer. After the curb or pavement has been pried loose, all materials and debris shall be removed and disposed of offsite. Take care shall not to disturb or damage adjacent asphalt pavement or curb that are to remain. Rough, jagged or cracked edges will not be acceptable. Any existing features that are to remain and are damaged by the removal operations shall be repaired by the Contractor at no additional cost to the Department.

The resulting pavement hydraulic cement concrete items edges shall be ground and/or finished to provide a smooth, consistent surface free from burrs, nicks, or other damage from the saw cutting operation.

Slurry material from saw cutting operation shall not be allowed to enter the storm drainage system. Vacuums or other methods shall be utilized to prevent slurry material from leaving the site.

1-23-17 (SPCN)

SECTION 502.03 (d) SAW CUT HYDRAULIC CEMENT CONCRETE ITEMS is amended to include the following:

The Contractor shall use a power saw to cut hydraulic cement concrete items as shown on the plans or as directed by the Engineer. Power saws and diamond or abrasive blades shall be designed for such work. The saw shall be capable of saw cutting horizontally and at varying degrees of pitch to match the slopes of the proposed adjacent curb or pavement. The saw shall also be capable of saw cutting the material to remain by back cutting.

Unless otherwise noted, the depth of the saw cut shall be for the full depth of the hydraulic cement concrete item. After the curb has been cut to its full thickness, the Contractor shall remove existing curb removed with pry bars or another method acceptable to the Engineer. After the curb or pavement has been pried loose, all materials and debris shall be removed and disposed of offsite. Take care shall not to disturb or damage adjacent hydraulic cement concrete items that are to remain. Rough, jagged or cracked edges will not be acceptable. Any existing features that are to remain and are damaged by the removal operations shall be repaired by the Contractor at no additional cost to the Department.

The resulting hydraulic cement concrete items edges shall be ground and/or finished to provide a smooth, consistent surface free from burrs, nicks, or other damage from the saw cutting operation.

Slurry material from saw cutting operation shall not be allowed to enter the storm drainage system. Vacuums or other methods shall be utilized to prevent slurry material from leaving the site.

1-23-17 (SPCN)

SECTION 502.04 – MEASUREMENT AND PAYMENT third paragraph is amended to include the following:

The price of concrete driveway entrances shall include constructing curbing along the sides of the driveway where shown on the plans.

2-6-17 (SPCN)

SECTION 504 – SIDEWALKS, STEPS, AND HANDRAILS is amended as follows:

Section 504.03(a) 1. Hydraulic cement concrete sidewalk is amended to include the following:

Hydraulic cement concrete sidewalk shall include the concrete bus stop waiting area as shown on the plans.

Section 504.03(d) CG-12 Detectable Warning Surface is amended to include the following:

Detectable Warning Surface shall be precast by Armor-Tile, ADA Solutions, Inc., Access Tile, or approved equal, then cast in place. Color shall be Dark Grey (Federal Color No. 36118.) Verify color with County prior to ordering. Units shall be one piece each for each installation.

Section 504.04 Measurement and Payment first paragraph is amended to include the following:

The price shall also include constructing the concrete bus stop waiting area where shown on the plans.

Section 504.04 Measurement and Payment seventh paragraph is amended to include the following:

The price shall also include constructing curbing at the back edge of the sidewalk (away from the roadway) where shown on the plans.

8-3-17 (SPCN)

SECTION 507.03 (d) - HIGH VISIBILITY FENCES is replaced with the following:

The Contractor shall furnish and install temporary safety fence at required locations or as directed by the Engineer. The fence shall be no less than 4 feet high and be a bright orange polyethylene web design conforming to Section 242.02 (a) 12. of the Specifications.

The safety fence shall be installed on metal "T" or "U" steel or wood posts spaced on 6-foot centers and driven to a minimum depth of 18 inches or as needed to provide rigidity. The fencing shall be attached to the post every six inches with a polyethylene tie. Fencing shall not be fastened to trees.

The Contractor shall maintain the safety fence and remove it when no longer required or directed to by the Engineer.

1-23-17 (SPCN)

SECTION 508.01 – DESCRIPTION is amended to include the following:

This work shall consist of removing the 2” SM-9.5A temporary trail and temporary sidewalk asphalt concrete surface course.

1-23-17 (SPCN)

SECTION 512 - MAINTAINING TRAFFIC is amended to include the following:

This Project is located within a high traffic volume area consisting of passenger cars, tour buses, pedestrians, bicyclists, public and private transit buses, and taxis among other users. The Contractor shall provide safe passable access for all users throughout the site for the duration of the Project. This will require that the Contractor shift work zones within the individual Maintenance of Traffic plans included in the Contract.

A minimum six foot wide clear hard walking surface consisting of existing cement concrete sidewalk, finished cement concrete sidewalk, or temporary asphalt concrete sidewalk shall be present and maintained as indicated on the drawings.

An existing road surface may be used provided that the walkway is separated from vehicular traffic with a temporary barrier as specified in these Special Conditions and that an existing, temporary or proposed ADA accessible ramp is provided at all road to curb connection points.

If the Contractor, The Contractor shall coordinate and obtain approval from the Engineer and Arlington County Transportation Division of any proposed deviations from the approved Maintenance of Traffic Plan before implementing any changes. Coordination shall be at no additional cost to the Department.

2-3-17 (SPCN)

SECTION 601 – SELECTIVE TREE REMOVAL, TRIMMING, AND CLEANUP is amended as follows:

Section 601.01 – Description is amended to include the following:

This work shall consist of removing the tree trunk and grinding trunk base and large buttress roots.

Section 601.02 – Procedures is amended to include the following:

Remove stumps and immediate root plate from existing trees designated for removal. Grind trunk bases and large buttress roots to the depth of the largest buttress root or at least 8 inches below the top most roots whichever is less and over the area of three times the diameter of the trunk (DBH).

1. For trees where the stump will fall under new paved areas, grind roots to a total depth of 8 inches below the existing grade. If the sides of the stump hole still have greater than approximately 20% wood visible, continue grinding operation deeper and or wider until the resulting hole has less than 20% wood. Remove all wood chips produced by the grinding operation and back fill in 8 inch layers with fill of a quality acceptable to the Engineer for fill material under structures, compacted to 95% of the maximum dry density standard proctor.
2. In areas where the tree removal location is to be a new planting bed or lawn, remove all woodchips and backfill stump holes with planting soil as defined in Standard Specifications, in maximum of 12 inch layers and compact to 80 - 85% of the maximum dry density standard proctor.

Section 601.04 – Measurement and Payment is amended to include the following:

Landscape Remove and Dispose of Tree or Shrub will be measured in units of each for each tree or shrub between 4 and 18 inches diameter at breast height (DBH) removed and disposed of and will be paid for at the each contract unit price. This price shall include removing and disposing of trees and shrubs that are between 4 and 18 inches (DBH) and removing and grinding stumps as described herein.

Removing and disposing of plant materials less than 4 inches (DBH) shall be included in the Clearing and Grubbing lump sum price.

Payment will be made under:

Pay Item	**Pay Unit**
Landscape Remove and Dispose of Tree or Shrub	Each

1-23-17 (SPCN)

CONDUITS: Proposed signal and lighting conduits under streets shall be directionally drilled. Specific directional drilling work areas are not depicted on the plans. Directional drilling areas shall not be within roadways open to traffic or require closing the Custis Trail. When not within the work zones depicted on the plans, the Contractor shall protect work areas for directional drilling in accordance with the Virginia Work Area Protection Manual (shoulders/road edge closures figure TTC-4.1, and sidewalk closures TTC-35.0 and TTC-36.1). Sidewalk and trail users shall be protected from the directional drilling work areas with temporary safety fence.

2-3-17 (SPCN)

EXISTING PAVER SIDEWALK on Existing Bridge 48"x48" Scoring Pattern

The Contractor shall remove and salvage existing concrete hexagonal pavers from the bridge sidewalk; cut 1”x1” keys into the existing concrete; and furnish and install primer/adhesive and concrete as shown on the drawings. The Contractor shall replace existing concrete pavers with concrete sidewalk placed, finished, and cured in accordance with Section 502 of the Specifications and score or sawcut the new concrete sidewalk in a 48"x48" pattern as shown on the plans. Existing paver and setting bed depths shown on the drawings are assumed based on the Gateway Park plans. The Contractor shall verify depths in spot location before commencing work. If existing conditions are different than shown, an alternate design may be used as approved by the Engineer. Existing pavers shall only be removed by hand.

SIDEWALK MODIFIED will be measured in square yards and will be paid for at the contract unit price per square yard. This price shall include removing and salvaging and disposing of existing sidewalk pavers, cutting keys, furnishing and installing primer/adhesive and concrete, finishing, and curing.

Payment will be made under:

Pay Item	Pay Unit
Sidewalk Modified	Square Yard

2-6-17 (SPCN)

LIGHTING WORK: Minor short duration lighting work including is expected on the south side of WB Lee Highway between N. Oak Street and N. Lynn Street. Not all work zones required for lighting work in this area are depicted on the plans. When not within the work zones depicted on the plans, the Contractor shall protect lighting work areas in accordance with the Virginia Work Area Protection Manual (shoulders/road edge closures Figure TTC-4.1, shoulder/road edge closure with encroachment Figure TTC-5.1, and sidewalk closures TTC-35.0 and TTC-36.1).

2-3-17 (SPCN)

PEDESTRIAN SHORT AND TALL FENCE

Pedestrian fence shall be CleaVu Invisible Wall fence of the model shown on the plans with special design posts and top and bottom c-channel. The posts and c-channel shall be 306L stainless steel.

The Contractor shall submit shop drawings of fence components for the Engineer's review and approval by before ordering of any materials and before fabricating and installing fence.

The Contractor shall survey and layout the cast in place fence post anchor bolt inserts. Furnish and install anchor bolts, fence posts, fence panels, and c-channels in accordance with the manufacturer's instructions and Section 507 of the Specifications. The distance between fence posts and curvature shall be measured after the posts are installed. The top and bottom c-channels shall be fabricated to the length and curvature determined by the Contractor after the fence posts are installed.

Fence (Height) will be measured in linear feet and will paid for at the contract unit price per linear foot. This price shall include furnishing and installing anchor bolts, fence posts, fence panels, and c-channels.

Payment will be made under:

Pay Item	**Pay Unit**
Fence (Height)	Linear Foot

2-15-17 (SPCN)

PUBLIC ART CONSTRUCTION

The Contractor shall furnish and install concrete, controller cabinet and luminous body foundations, pipe, electrical conduits, and the stainless-steel base rim plate for the luminous bodies as shown on the plans, in accordance with the specifications, in consultation with the Artist, and as directed by the Engineer.

The Artist will provide an installation template for the bolt patterns and the foundation embeds to the Contractor.

The controller cabinet shall be installed and left empty for the Artist to install wiring and lighting control equipment. The cabinet shall be installed on a concrete foundation and secured with anchor bolts. Concrete foundations shall extend a minimum of 3 inches outside of the cabinet on all sides of cabinet enclosure, be a minimum of 3-inches high above grade level, and a minimum of 6 inches below grade level. Concrete foundation shall have minimum of 1 inch of slope from edge of cabinet enclosure to the edge of the foundation.

Public art controller cabinet foundation will be measured in units of each and will be paid for at the each contract unit price. This price shall include furnishing and installing concrete, reinforcing steel, anchor bolts, washers, nuts, bolt circle templates, conduits, excavating, backfilling, compacting, disposing of surplus and unsuitable material, and restoring disturbed areas.

Install public art controller cabinet will be measured in units of each and will be paid for at the each contract unit price. This price shall include obtaining, transporting, and installing cabinet.

Stainless steel sheets/grates for luminous body foundations will be paid for at the contract lump sum price. This price shall include furnishing and installing solid stainless steel sheets with laser cut grates.

Luminous body foundations will be measured and paid for in cubic yards of Class A3 concrete in accordance with Section 404 of the Specifications. This price shall include forming, furnishing and installing concrete; drain pipe, conduit, anchor bolts, circular ties, stainless steel base rim plate, reinforcing steel; and finishing and curing concrete.

Reinforcing steel for luminous body foundation will be measured and paid for in accordance with Section 406 of the Specifications.

Payment will be made under:

Pay Item	**Pay Unit**
Public art controller cabinet foundation	Each
Install public art controller cabinet	Each
Stainless steel sheets/grates	Lump Sum

9-28-17 (SPCN)

TEMPORARY LIGHTING shall consist of furnishing, installing, and removing and disposing of temporary lighting for roadways and crosswalks within the project limit during all construction phases and the bike trail during construction Phase 2 and 3 as shown on the plans, in accordance with the specifications and as directed by the Engineer. Minimum maintained illumination on all surfaces shall be 0.3FC. Use metal halide wall packs with integral photocell mounted to wood poles or an alternative light source approved in advance by the Engineer. Mount luminaires at 20 feet above finished grade on 30-foot poles. Provide quantity of poles and luminaires necessary to achieve required illumination. Coordinate location of poles with construction phasing. Use 1P-20A circuit breakers in proposed control center CC1 and #4 AWG Type UF cable. Protect cables from 0 to 10 feet above finished grade. Wood poles for temporary lighting shall conform to Section 236 of the Specifications. Temporary lighting shall include luminaires, conduit, conductor cables, and ground rods and making all necessary electric connections. Existing lighting to be removed may be used in the temporary lighting when such use does not interfere with other construction and phasing.

Temporary Lighting will be paid for at the contract lump sum price. This price shall include furnishing, installing, maintaining, and removing and disposing of the temporary lighting.

Payment will be made under:

Pay Item	Pay Unit
Temporary Lighting	Lump Sum

2-8-17 (SPCN)

SP102-010100-00

VIRGINIA DEPARTMENT OF TRANSPORTATION
SPECIAL PROVISION FOR
NON-DISCRIMINATION IN EMPLOYMENT AND CONTRACTING PRACTICES

January 10, 2017

I. Description

This Special Provision implements Executive Order 61, ensuring equal opportunity and access for all Virginians in state contracting and public services.

II. Non-Discrimination

The Contractor shall maintain a non-discrimination policy, which prohibits discrimination by the Contractor on the basis of race, sex, color, national origin, religion, sexual orientation, gender identity, age, political affiliation, disability, or veteran status. This policy shall be followed in all employment practices, subcontracting practices, and delivery of goods or services. The Contractor shall also include this requirement in all subcontracts valued over $10,000.

III. Measurement and Payment

Conformance with this Special Provision will not be measured for individual payment, and will be considered incidental to the Work.

SP105-000100-00

VIRGINIA DEPARTMENT OF TRANSPORTATION
SPECIAL PROVISION FOR
INFORMAL PARTNERING

January 14, 2008c; Reissued July 12, 2016

I. DECLARATION AND DESCRIPTION

The Virginia Department of Transportation (VDOT) is firmly committed to the formation of a partnering relationship with the Contractor, all subcontractors, suppliers, FHWA representatives; where appropriate, other federal agencies, local government officials, utilities representatives, law enforcement and public safety officials, consultants, and other stakeholders to effectively and efficiently manage and complete each construction or maintenance contract to the mutual and individual benefits and goals of all parties. Partnering is an approach to fulfilling this commitment where all parties to the contract, as well as individuals and entities associated with or otherwise affected by the contract, willingly agree to dedicate themselves by working together as a team to fulfill and complete the construction or maintenance contract in cost effective ways while preserving the highest standards of safety and quality called for by the Contract combined with the goals of on time/on budget completion. The approach must still allow for the fact that the members of the team share many common interests yet have differing authorities, interests, and objectives that must be accommodated for the project to be viewed as successful by all parties. It is recognized by VDOT that partnering is a relationship in which:

- Trust and open communications are encouraged and expected by all participants
- All parties move quickly to address and resolve issues at the lowest possible level by approaching problems from the perspectives and needs of all involved
- All parties have identified common goals and at the same time respect each other's individual goals and values
- Partners create an atmosphere conducive to cooperation and teamwork in finding better solutions to potential problems and issues at hand

II. INFORMAL PARTNERING STRUCTURE

It is the business intent of the Department that informal partnering will be required on this project, whereby the spirit and principles of partnering are practiced from onsite field personnel to executive level owners and employees. The VDOT Field Guide to Partnering available on the VDOT website http://www.virginiadot.org/business/resources/partnerfinalallowres.pdf will be the standard reference guide utilized to structure and guide partnering efforts. This guide will be systematically evaluated to incorporate better practices as our partnering efforts evolve. Of particular note is the need for effective and responsive communication between parties to the partnering relationship as emphasized in Section 105.03(d) of the Specifications.

Informal partnering need not require the services of a professional facilitator and may be conducted by the actual partnering participants themselves. Informal partnering, and more specifically the Partnering Charter, will not change the legal relationship of the parties to the Contract nor relieve either party from any of the terms of the Contract.

III. PROCEDURES

The following are general procedures for informal partnering and are not to be considered as inclusive or representative of procedural requirements for all projects. Participants shall consult the VDOT Field Guide for Partnering for assistance in developing specific guidelines to those efforts required for their individual projects.

Prior To Project Construction: At least 5 days prior to or in connection with the preconstruction conference the Contractor shall attend a conference with the Engineer at which time he and the Engineer shall discuss the extent of the informal partnering efforts required for the project, how these have been accommodated in the Contractor's bid and the identity of expectations and stakeholders associated with the project. Informal partnering efforts require the Department and the Contractor to mutually choose a single person from among their collective staffs, or a trained facilitator to be responsible for leading all parties through the VDOT Field Guide to Partnering and any subsequent partnering efforts.

Partnering Meetings During Project Construction: In informal partnering efforts the Contractor shall provide a location for regularly scheduled partnering meetings during the construction period. Such meetings will be scheduled as deemed necessary by either party. The Contractor and VDOT will require the attendance of their key decision makers, including subcontractors and suppliers. Both the Contractor and VDOT shall also encourage the attendance of affected utilities, concerned businesses, local government and civic leaders or officials, residents, and consultants, which may vary at different times during the life of the Contract The Department and the Contractor are to agree upon partnering invitees in advance of each meeting. Follow-up partnering workshops may be held throughout the duration of the project as deemed necessary by the Contractor and the Engineer.

IV. MEASUREMENT AND PAYMENT

Informal Partnering, because the extent to which certain partnering activities are pursed is at the Contractor's option, and may vary according to project complexity, work history between the parties, project duration, the Contractor's own unique methods, means, and schedule to execute and complete the work, etc.; will not be paid for as a separate bid item but the all costs associated with informal partnering efforts for the duration of the work shall be considered inclusive and incidental to the cost of other appropriate items.

SP107-000110-00

C-45
Rev. 10-9-14; Reissued 10-27-16

VIRGINIA DEPARTMENT OF TRANSPORTATION

STORMWATER POLLUTION PREVENTION PLAN (SWPPP) AND THE VIRGINIA POLLUTANT DISCHARGE ELIMINATION SYSTEM (VPDES) GENERAL PERMIT FOR THE DISCHARGE OF STORMWATER FROM CONSTRUCTION ACTIVITIES

CONTRACTOR CERTIFICATION STATEMENT

Order No.: L89 Project Number: 0029-000-859,C501,B605

Route: 29 Contract ID. #: C000109813C01B

I certify under penalty of law that I understand the terms and conditions of the project contract, plans, permits, specifications and standards related to the erosion and sediment control, stormwater management and stormwater pollution prevention plan requirements for the affected activities associated with this project, and the requirements of the VPDES General Permit for the Discharge of Stormwater from Construction Activities (the VPDES Construction Permit) , if applicable to this project, issued by the Virginia Department of Environmental Quality. The VPDES Construction Permit authorizes the storm water discharges associated with the construction activities from the project site identified and described in the bid documents and subsequent contract including any onsite or off-site support facility areas located within VDOT right of way or easement and required for the complete fulfillment of the work therein.

Signature: _____

Name: _____

Title: _____

Contracting Firm: _____

Address: _____

Phone Number: _____

* Project Address/Location: _____

_____

Certified on this date: _____

* Include any off-site support facility areas located within VDOT right of way or easement.
(Note: This form must be returned with performance and payment bonds)

SP108-000120-00

VIRGINIA DEPARTMENT OF TRANSPORTATION
SPECIAL PROVISION FOR
CPM PROGRESS SCHEDULE FOR CATEGORY III PROJECTS

March 1, 2011; Reissued July 12, 2016

Section 103.06(e) **Progress Schedule** of the Specifications is deleted and replaced by this provision.

Section 108.03 Progress Schedule of the Specifications is deleted and replaced by this provision.

For definitions of scheduling terms not defined herein, and guidelines on preparing and maintaining the Progress Schedule, refer to the *VDOT Post-Award Scheduling Guide*.

I. GENERAL REQUIREMENTS

This work shall consist of generating and maintaining a project Progress Schedule to aid the Contractor and the Department in planning and executing the Work. The Progress Schedule shall be used by the Contractor, the Department, and all involved parties to plan and schedule all work required to complete the project. The Progress Schedule shall also be used by the Department to monitor progress of the individual activities required to complete the project; as well as to assess the overall progress of the Work and to evaluate the effects of time-related changes on the project. The Progress Schedule shall consist of a Critical Path Method (CPM) Progress Schedule, Progress Schedule Narrative, and Progress Earnings Schedule submitted according to this provision.

The Contractor shall prepare and submit, for the Engineer's review and acceptance, a Progress Schedule to communicate the Contractor's intentions and proposed plan to accomplish the Work according to the Contract. The Progress Schedule shall depict the sequence in which the Contractor proposes to perform the Work and the dates on which the Contractor contemplates starting and completing all schedule activities required to complete the project. The Contractor shall maintain the Progress Schedule, at a minimum, monthly to ensure that it continues to represent the current status of the project and the Contractor's current work plan to complete the project.

The Contractor shall attend a Scheduling Conference with the Engineer no later than seven (7) calendar days prior to beginning the Work, with the exception of project start-up activities such as submittals, mobilization, surveying, construction access and signage, erosion and sedimentation controls, etc., as approved by the Engineer. The Scheduling Conference will be held to discuss the Contractor's overall plan to complete the Work and the detail work plan for the first ninety (90) calendar days of Work. The Scheduling Conference may be held in conjunction with the Pre-Construction Conference or at a separate meeting as mutually agreed to by the Contractor and the Engineer. The Contractor shall discuss his/her overall plan of operations concerning the Maintenance of Traffic (MOT)/Sequence of Construction or any proposed deviations from the phasing, staging, or sequence of construction as indicated on the Contract plans or as approved by the Engineer. During the Scheduling Conference key issues and project specific requirements necessary for the development of the Baseline Progress Schedule shall also be discussed. Such key issues shall include as applicable, but are not limited to key submittals, permits, construction access, right of way, environmental, utility, traffic or local events indentified in the Contract that may impact traffic; as well as other limitations to the Work or any known constraints or foreseeable issues that may impact the schedule. Such project specific requirements shall include as applicable, but are not limited to scheduling, phasing, sequencing, milestone(s), work to be performed by the Department or other previously identified involved parties; or any known or likely constructability issues relative to the Contract plans and specifications.

II. OVERVIEW OF THE VARIOUS REQUIRED PROGRESS SCHEDULE SUBMISSIONS

A. Preliminary Progress Schedule – At least two (2) business days prior to the Scheduling Conference, or as approved by the Engineer, the Contractor shall submit to the Engineer for review and acceptance a Preliminary Progress Schedule. At the Contractor's discretion, a complete detailed Baseline Progress Schedule for the entire project may be submitted in lieu of the Preliminary Progress Schedule. The Preliminary Progress Schedule submission shall consist of the following:

1. Preliminary Progress Schedule: The Preliminary Progress Schedule shall depict, at a detailed level, the Contractor's proposed sequence and start/finish dates for all activities scheduled for the first ninety (90) calendar days of work. It shall also include, as applicable, any milestones or work to be performed by sub-contractors, the Department, or third parties during the first ninety (90) calendar days of work. The Preliminary Progress Schedule shall also depict at a summary level the proposed overall sequence and timing of the remaining Work. The Preliminary Progress Schedule shall be prepared according to Section IV (A), with the exception of cost-loading.

2. Preliminary Progress Schedule Narrative: The Preliminary Progress Schedule Narrative shall describe the Contractor's detailed work plan for the first ninety (90) calendar days of work. The Preliminary Progress Schedule Narrative shall be prepared according to Section IV (B).

Until the Baseline Progress Schedule is accepted by the Engineer, the Contractor shall submit an update of the Preliminary Progress Schedule monthly, within five (5) working days after the current data date or as approved by the Engineer. The updated Preliminary Progress Schedule shall show the actual progress of work completed to date and the current detailed schedule for accomplishing the work planned for the following ninety (90) calendar days of Work, as of the data date. It shall also show the summary level activities required to complete the remainder of the Work.

B. **Baseline Progress Schedule –** Within thirty (30) calendar days after the Notice to Proceed (NTP) date or as approved by the Engineer, the Contractor shall submit in its entirety, his/her Baseline Progress Schedule, to the Engineer for review and acceptance. The Baseline Progress Schedule submittal shall consist of the following:

1. Baseline Progress Schedule: The Baseline Progress Schedule shall represent the Contractor's initial detailed plan to accomplish the entire scope of Work according to the Contract. The Baseline Progress Schedule shall be prepared based on the Critical Path Method (CPM) and shall depict in a time-scaled bar-chart plot, the sequence in which the Contractor proposes to perform the Work, the project critical path, and the dates on which the Contractor contemplates starting and completing the individual schedule activities required to complete the project. The Baseline Progress Schedule shall also depict the current status of the project and the Contractor's current plan to complete the remaining work, as of the Baseline Progress Schedule submittal date.

   The Baseline Progress Schedule shall reflect a practicable work plan and logical progress of the Work as indicated in the Contract or as approved by the Engineer. When preparing the schedule, the Contractor shall consider as applicable, all known or specified constraints or restrictions such as: holidays, seasonal, normal weather, traffic or previously identified local events that may impact traffic, utility, railroad, right-of-way, environmental, permits, or other limitations to the Work that will impact the schedule. The Baseline Progress Schedule shall be prepared according to Section IV (A).

2. Baseline Progress Schedule Narrative: The Baseline Progress Schedule Narrative shall describe the Contractor's proposed overall work plan to complete the entire project as reflected on the Baseline Progress Schedule. The Baseline Progress Schedule Narrative shall be prepared according to Section IV (B).

3. Baseline Progress Earnings Schedule: The Baseline Progress Earnings Schedule shall indicate the Contractor's anticipated cumulative progress each month as of the Contractor's progress estimate date as defined in Section 109.08(a) of the Specifications. The anticipated cumulative progress shall be expressed as "Percent Complete" based on the anticipated total earnings to date relative to the Total Contract Value. The Baseline Progress Earnings Schedule shall reflect the anticipated progress of the Work as shown on the Baseline Progress Schedule and shall be prepared on the VDOT Form C-13C according to the VDOT Post-Award Scheduling Guide. At the Contractor's discretion, the Progress Schedule may be cost-loaded, in which case, the Progress Earnings Schedule shall then be prepared and submitted using the VDOT Form C-13CPM.

The Baseline Progress Schedule will be reviewed by the Engineer for acceptance according to Section VII. Upon acceptance by the Engineer, the Baseline Progress Schedule shall replace the Preliminary Progress Schedule. The accepted Baseline Progress Schedule shall henceforth become the project Schedule of Record (SOR). The SOR shall be defined as the currently accepted Baseline Progress Schedule. Until a subsequent Revised Progress Schedule is submitted and accepted, the accepted Baseline Progress Schedule shall remain the SOR against which all subsequent Progress Schedule Updates and progress will be compared. The SOR shall be used by the Engineer to assess the Contractor's schedule-based performance on the project.

C. **Progress Schedule Update –** The Contractor shall on a monthly basis submit for the Engineer's review and acceptance the Contractor's Progress Schedule Update within five (5) business days after the Contractor's progress estimate date or as approved by the Engineer. The Progress Schedule Update shall consist of the following:

1. Progress Schedule Update: The Progress Schedule Update shall depict the current status of the Work and the Contractor's current plan to complete the remaining work as of the data date. The Progress Schedule Update shall be prepared according to Section IV (A).

2. Progress Schedule Update Narrative: The Progress Schedule Update Narrative shall describe the work performed since the previous update and the Contractor's current plan for accomplishing the remaining work. It shall also describe any progress deficiencies, schedule slippages, or time-related issues encountered; as well as any actions taken or proposed to avoid or mitigate the effects of the progress deficiencies, schedule slippages, or time-related issues. The Progress Schedule Update Narrative shall be prepared according to Section IV (B).

3. Progress Earnings Schedule Update: The Progress Earnings Schedule Update shall depict the current status of the project by percent complete based on the actual total earnings to date relative to the Total Contract Value. The Progress Earnings Schedule Update shall show the actual monthly and cumulative earnings to date as reflected on the Contractor's payment estimate, any variance in percent complete relative to the SOR, and the projected earnings for the remaining payment periods. The Progress Earnings Schedule Update shall be prepared on the VDOT Form C-13C or as specified herein and according to the VDOT Post-Award Scheduling Guide.

The Progress Schedule Update will be reviewed by the Engineer for acceptance according to Section VII. Upon acceptance by the Engineer, the Progress Schedule Update shall replace any previous Progress Schedule Updates as the current update of the SOR; however, it shall not replace the SOR. The currently accepted Progress Schedule Update shall henceforth become the contemporaneous schedule with which to report the current status of the project, plan the remaining Work, and evaluate the effects of any time-related changes or delays on the remaining Work.

D. Revised Progress Schedule – When the current Progress Schedule or work plan deviates significantly from the SOR, the Contractor shall submit to the Engineer for review and acceptance a Revised Progress Schedule to represent the Contractor's revised plan to complete the remaining work. Deviate significantly will be construed to mean deviations from the SOR resulting from schedule impacts or major changes in the Progress Schedule that alter the project critical path, Contract interim milestone(s), or project completion; or causes a major shift in the Progress Earnings Schedule. A Revised Progress Schedule will be required when:

1. The Engineer approves a Schedule Impact Analysis (SIA) for authorized or unanticipated changes in the Work or conditions that significantly impacts the Progress Schedule, as determined by the Engineer.

2. The Contractor proposes a different approach to his/her work plan that significantly impacts the Progress Schedule or the Engineer determines that the current Progress Schedule Update or Contractor's current work plan deviates significantly from the SOR. Such deviations may include, but are not limited to major changes in the Contractor's proposed phasing, general sequence, resource plan, means and methods, or durations. The Contractor may revise his/her Progress Schedule at any time, at his/her discretion; however, the Engineer will only consider accepting a Revised Progress Schedule submission for major changes that deviate significantly from the SOR.

3. The Engineer determines that progress of the Work is trending towards unsatisfactory, according to Section VIII (C), and in the opinion of the Engineer, it is apparent that the progress deficiency will not result in an extension of the completion date of the project beyond the Contract time limit and a Recovery Plan is not required to correct the progress deficiency. In such cases, the Engineer will request a meeting with the Contractor to discuss the progress deficiency to determine the appropriate corrective action required.

The Revised Progress Schedule submission shall be based on the currently accepted Progress Schedule Update and shall be prepared and submitted in the form of a Baseline Progress Schedule as described in Section II (B). However, it shall reflect the current status of the project as of the submittal date, approved changes in the Work, and the proposed plan for completing the remaining work. The Revised Progress Schedule shall be submitted in lieu of a subsequent Progress Schedule Update unless directed otherwise by the Engineer. The Revised Progress Schedule will be reviewed by the Engineer for acceptance according to Section VII. Upon acceptance by the Engineer, the Revised Progress Schedule shall henceforth replace the accepted Baseline Progress Schedule or any previously accepted Revised Progress Schedule as the SOR for the remainder of the project.

E. Final As-Built Progress Schedule – Within thirty (30) calendar days after final acceptance, the Contractor shall submit to the Engineer his/her Final As-built Progress Schedule. The Final As-built Progress Schedule shall show the actual start and finish dates for each activity in the schedule. The Contractor shall certify in writing that the Final As-built Progress Schedule accurately reflects the actual start and finish dates for all activities contained in the Progress Schedule. The Final As-built Progress Schedule shall be submitted in the form of a monthly Progress Schedule Update and shall represent the last Progress Schedule Update submission.

III. SCHEDULE IMPACT ANALYSIS (SIA) FOR CHANGES AND DELAYS

A. Changes, Delays, and Schedule Impacts – When changes in the Work that will impact the schedule are proposed or authorized by the Engineer, the Contractor shall submit for the Engineer's review and approval, a Schedule Impact Analysis (SIA) to determine the impact of the change. Also, when the Contractor believes he is entitled to a time extension and/or additional compensation for a time-related impact that is attributable to a cause beyond the control of and without the fault, negligence, or responsibility of the Contractor or those for whom the Contractor is responsible, the Contractor shall submit for the Engineer's review and approval, a SIA and all available supporting data to substantiate the request for modification of the Contract. The Contractor's request and SIA shall be submitted according to the following:

1. Impacts Due to Directed or Authorized Changes: When the Engineer issues a written order or authorizes a change in the Work in writing, the Contractor shall submit in writing within seven (7) calendar days of the Engineer's written direction or as required by the Engineer, a request for modification of the Contract, if the Contractor believes that additional time and/or compensation is required to perform the Work. Such changes in the Work may include, but are not limited to directed or authorized changes according to the applicable portions of Sections 104.02, 108.05, and 109.05 of the Specifications. The Contractor shall submit along with his/her request a *prospective* Schedule Impact Analysis (SIA) to substantiate the request for modification of the Contract according to this provision and the applicable portions of Sections 104.02, 108.05, and 109.05 of the Specifications.

2. Impacts Due to Unanticipated Changes or Delays: When the Contractor discovers or encounters previously unknown or unanticipated changes in the Work or conditions, or a delay event that he believes will impact progress of the Work or completion of the project, the Contractor shall notify the Engineer in writing within two (2) working days of such discovery or encounter. Such changes in the Work or conditions or delay events may include, but are not limited to unusually severe weather, extraordinary or catastrophic weather events, errors or omissions in the Contract; or differing site conditions or utility delays according to the applicable portions of Sections 104.03 and 105.08 of the Specifications.

   The Contractor shall then gather all available pertinent information and data necessary to determine how such change in the Work or condition will impact progress of the Work or completion of the project. The Contractor and the Department shall promptly meet to evaluate the scope and potential impact of such change or condition to allow the Engineer to make a timely decision on how to proceed, as well as to determine how the impact of such change or condition can be avoided or mitigated.

   The Engineer may direct the Contractor to submit a SIA prior to proceeding with the work affected by such change, condition, or delay, in which case the Contractor shall submit in writing within seven (7) calendar days after receipt of the Engineer's direction, a request for modification of the Contract and a *prospective* SIA to substantiate the request for modification of the Contract.

   Otherwise, the Contractor shall submit in writing a request for modification of the Contract and a *contemporaneous* SIA to substantiate the request for modification of the Contract. The request for modification of the Contract and SIA shall be submitted within fourteen (14) calendar days of completion of the changed work or work directly impacted by such condition, or the cessation date of the delay event, or as approved by the Engineer.

3. Unresolved Impacts: When the Contractor believes he is entitled to a time extension and/or additional compensation for an unresolved impact to the Work that is attributable to a cause beyond the control of and without the fault, negligence, or responsibility of the Contractor or those for whom the Contractor is responsible, the Contractor shall submit for the Engineer's review and approval, a request for modification of the Contract and a *retrospective* SIA to substantiate the request for modification of the Contract. Such impacts may involve, but are not limited to changes authorized by either Force Account Work or Unilateral Work Order, or other changes for which the scope of the change or magnitude of the impact could not be determined or mutually agreed to at the time the change was authorized or the delay event or changed condition was encountered.

The Contractor's notice of a change, a subsequent meeting with the Engineer, or submittal of a request for modification of the Contract as defined herein, shall not constitute a notice of intent to file a claim as required by Section 105.19. *No part of this provision is intended to alter, replace, or supersede Section 105.19 of the Specifications. The Contractor must adhere to Section 105.19 as well as this provision to preserve their rights to file a claim.*

B. Schedule Impact Analysis (SIA) – The SIA submission shall include a SIA schedule and a written SIA statement as well as supporting data and such information necessary for the Department to make an adequate and timely evaluation of any time-related request received from the Contractor for modification of the Contract. The SIA submission shall consist of the following:

1. A SIA schedule, as specified herein, which shall depict the schedule impact of the change in the Work or condition or delay event based on the currently accepted Progress Schedule Update, submitted prior to the earlier of the date the change in the Work was authorized or the changed condition or delay event was encountered. If the most recently submitted Progress Schedule Update is unacceptable, then the Engineer will evaluate the request based on the previously accepted Progress Schedule Update. In which case, the Contractor shall update the previously accepted Progress Schedule Update to show the actual progress of the Work to date as of the earlier of the date the change in the Work was authorized or the changed condition or delay event was encountered. The SIA schedule shall:

    a) Be based on the "Time Impact Analysis (TIA)" or "Contemporaneous Schedule Analysis" method as determined by the Engineer, to determine the status of the currently accepted Progress Schedule Update before and after the change in the Work or condition or delay event.

    b) Show a fragnet (fragmentary network of added or changed activities) representing the added work, changed work or condition, or delay event(s). The fragnet activities shall be logically linked to the affected activities to show the direct impact on the work.

    c) Show the current status of the completed and on-going activities as of the date the change in the Work was authorized or the changed condition was encountered or the delay event started.

    d) Depict the schedule impact by showing a comparison between the impacted Progress Schedule Update and the most recently accepted Progress Schedule Update with a data date closest to and prior to the earlier of the date the change in the Work was authorized or the changed condition or delay event was encountered.

    e) Depict the overall impact on the project critical path, Contract interim milestone(s), other significant dates, and the Contract fixed completion date, as applicable.

2. A written SIA statement to:

    a) Describe the type, cause, and scope of the added work, changed work or condition, or delay event.

    b) Provide sequence and timing of events and/or actions by all involved parties relating to the change or delay.

    c) Describe the particular operations affected as well as identify by Activity ID and Activity Name the activities that are directly impacted.

    d) Describe the impact on the critical path, total float, Contract interim milestone(s), other significant dates, or the Contract fixed completion date, as applicable.

    e) Include a comparative analysis report relative to the currently accepted Progress Schedule Update to identify all changes made to the impacted Progress Schedule.

f) Identify any actions taken and/or needed to avoid or mitigate the delay or the effects of the delay.

Approval or rejection of the SIA by Engineer shall be made within ten (10) business days after receipt of the SIA, unless subsequent meetings and negotiations are necessary, as determined by the Engineer. Upon approval by the Engineer, the Contractor shall incorporate the SIA into the Progress Schedule and shall submit the impacted Progress Schedule as a Progress Schedule Update or Revised Progress Schedule as directed by the Engineer. If appropriate, the approved SIA shall be used to substantiate any request for a time extension or time-related damages or additional compensations, according to the applicable portions of Sections 104.02, 104.03, 105.08, 108.04, and 109.05 of the Specifications.

IV. DETAILED REQUIREMENTS FOR PROGRESS SCHEDULE SUBMISSIONS

A. Progress Schedule – The Progress Schedule shall conform to the following requirements:

1. Software Compatibility Requirements: The Contractor shall submit his/her Progress Schedule in the Primavera proprietary exchange format (XER) to ensure compatibility with the Department's scheduling software system. The Department's scheduling software system is the latest version of Primavera's Project Management software (currently P6 version 6.2). Compatible shall mean that the Contractor-provided electronic file versions of the schedule can be imported into the Department's scheduling software system with no modifications, preparation or adjustments. For projects that are included in a multi-contract mega-project, the Contractor shall prepare and maintain his/her Progress Schedule in the Department's scheduling software system. At the Contractor's request, secured access via the internet may be granted to allow the Contractor to develop and maintain his/her Progress Schedule in the Department's scheduling software system. The Progress Schedule shall be submitted according to Section V.

2. Software Settings: If Primavera (P6) or equivalent scheduling software with similar features is used to prepare the Progress Schedule, the Contractor shall define the project attributes and schedule calculation options according to the software settings detail requirements defined in the VDOT Post-award Scheduling Guide.

3. Work Breakdown Structure (WBS): The Baseline Progress Schedule shall be organized using a multi-level hierarchical Work Breakdown Structure (WBS). The Contractor shall define a project WBS to allow for a hierarchical organization and breakdown of the Work based on the Contractor's approach and according to the phasing/sequence of construction and traffic control plans as specified in the Contract or as approved by the Engineer.

4. Activity Codes: The Contractor shall define and assign as appropriate, activity codes to allow for filtering, grouping, and sorting of activities by Responsibility, Phase, Stage, Feature of Work, Area, Location, Work Type, Crew, and Contract Modification activity codes to facilitate review and use of the Progress Schedule. If Primavera (P6) or equivalent scheduling software with similar features is used to prepare the Progress Schedule, the Contractor shall define activity codes using the project-specific activity codes option. Use of global activity codes shall not be allowed and shall be grounds for rejecting the Progress Schedule submission. Project-specific activity codes shall be defined and assigned according to the detail requirements defined in the VDOT Post-award Scheduling Guide.

5. Calendars: The Contractor shall define and assign as appropriate, project-specific calendar to each activity to indicate when the activity can be performed. If Primavera (P6) or equivalent scheduling software with similar features is used to prepare the Progress Schedule, the Contractor shall define the project calendars using the project-specific option. The project calendars shall indicate, as applicable, the standard working hours per day, standard working days per week, and non-work days such as week-ends, holidays, weather days, local events, environmental, time-of-year restrictions, etc. Use of global calendars shall not be allowed and shall be grounds for rejecting the Progress Schedule submission. The project-specific calendars shall be defined according to the detail requirements defined in the VDOT Post-award Scheduling Guide.

6. Level of Detail: The Contractor shall develop the Progress Schedule to an appropriate level of detail that allows for the formation of a reasonable critical path. The Progress Schedule shall show as applicable, Contract milestones and other key milestones for significant project events. The Progress Schedule shall also show, as applicable, administrative, procurement, MOT, work to be performed by other involved parties, discrete work activities to indicate the type of operation and location of the work, and other necessary time-based tasks required for completion of the project. The Work shall be sub-divided as practical, to such a level that the activity durations for on-site work excluding, activities whose durations are specified elsewhere in the Contract, are twenty (20) workdays or less. Longer durations may be allowed, as approved by the Engineer, for activities that typically span long periods of time such as fabrication and delivery of materials, administrative, MOT, or other such level of effort activities.

7. Network Logic: The Progress Schedule network logic shall be based on the Precedence Diagram Method (PDM) and shall show the order and inter-dependence of the activities and the sequence in which the Contractor proposes to accomplish the Work. The Contractor shall apply the Critical Path Method (CPM) of network calculation to generate the Progress Schedule. The project critical path shall be based on the “Longest Path”. The Progress Schedule network logic shall be developed according to the detail requirements defined in the VDOT Post-award Scheduling Guide.

8. Schedule Constraints: All Contract milestone activities shall be constrained, as applicable, with a “Start On or After” (Early Start) date or “Finish On or Before” (Late Finish) date equal to the “Start No Earlier Than” or “Must Finish By” date specified in the Contract, except as specified below. The Contractor’s use of schedule constraints with the exception of the specific requirements defined below is not allowed, unless approved by the Engineer. The use of schedule constraints such as “Start On” or “Finish On” for the purpose of manipulating float or the use of schedule constraints that violate network logic such “Mandatory Start” or “Mandatory Finish” will not be allowed. When a schedule constraint is used, other than the schedule constraints specified herein, the Contractor shall provide explanation for the use of such constraint in the Progress Schedule or Progress Schedule Narrative.

9. Data Date: The data date is defined as the current status date of the Progress Schedule, which defines the start date for the scheduled remaining Work. All Progress Schedule submissions shall be calculated using an appropriate data date to indicate the status of the project at the time the Progress Schedule is submitted.

   a) For the Preliminary, Baseline, or subsequent Revised Progress Schedule submission, the data date shall be no more than five (5) business days prior to the submittal date.

   b) For the monthly Progress Schedule Update submissions the data date shall be the Contractor’s monthly progress estimate date as defined in Section 109.08(a) of the Specifications.

10. Total Float: This section is intended to apply only to considerations of Contract time extension requests relative to available total float. Considerations for other time-related impacts, if any, are covered in other Sections of the Specifications. Any request for a Contract time extension will be evaluated, according to Section 108.04, based on the critical path and available total float. Total float is defined as the amount of time, typically expressed in days (number of workdays or calendar days depending on the assigned calendar), that an activity can be delayed without extending the completion date of a related Contract interim milestone or the project, as applicable. Except as specified herein, total float shall be calculated, as applicable, relative to a constrained Contract interim milestone date or the Contract fixed completion date specified in the Contract or a subsequent Work Order.

    With the exception of A+B based Contracts, any float available in the Progress Schedule, at any time, shall be considered project float and is not for the exclusive use or benefit of either the Department or the Contractor. It shall be understood by the Contractor and the Department that float is a shared commodity and either party has the right to full use of any available float. Until such time that all available float is depleted, the project float shall be used responsibly in the best interest of the project and in a manner that best serves the timely completion of the Work by either a specified Contract interim milestone or the Contract fixed completion date, as applicable.

    For A+B based Contracts for which the Contractor bids the Contract time and/or Contract interim milestone(s), any float on a critical activity or activities on the critical path shall belong to the Contractor and any float on non-critical activities or activities not on the critical path shall belong to the project and shall be considered available project float for use by either the Department or the Contractor for the benefit of the project.

The Contractor shall not modify the Progress Schedule at any time for the purpose of manipulating float. Negative float conditions will not be allowed in the Preliminary, Baseline, or Revised Progress Schedule.

11. Progress Schedule Update: The Progress Schedule Update shall reflect the actual status of the Work and the current plan to complete the remaining work as of the current data date. It shall show the actual start/finish dates for each completed activity and the actual start date, remaining duration, and progress (percent complete) of each on-going activity. The Progress Schedule Update shall allow for an accurate determination of progress of completed and on-going work based on total actual cost (earnings) to date; as well as an accurate projection of the anticipated monthly earnings for the remaining work based on remaining cost. The Progress Schedule Update shall be based on the most recently accepted Progress Schedule and shall be prepared according to the detail requirements defined in the VDOT Post-award Scheduling Guide.

B. Progress Schedule Narrative – As specified in Section II of this provision, a Baseline Progress Schedule Narrative shall be submitted with the Baseline Progress Schedule submission and a Progress Schedule Update Narrative shall be submitted with the Progress Schedule Update submission. The Progress Schedule Narrative shall be prepared according to the following:

1. Baseline Progress Schedule Narrative: The Baseline Progress Schedule Narrative shall include the following written information:

a) The Contractor's overall plan describing:

i) The proposed overall sequence of construction, including where the work will begin and how the work will progress;
iii) The methodology, scheduling assumptions, and general procedures for completing each major feature of Work;
iii) A list of the major resources (number and type of crews and equipment) required to complete the project as scheduled. For early completion schedules (projects with an early completion interim milestone provision or projects with scheduled completion dates earlier than the Contract specified date by thirty (30) calendar days or more), the Contractor shall also provide a written resource plan for the major operations to demonstrate the Contractor's ability and commitment to provide resources at the level required to complete the work within the timeframes shown in the Progress Schedule;
iv) Anticipated daily production rates for each major operation.

b) A description of the project critical path.

c) A listing of the major milestone dates, including as applicable, Contract interim milestone(s), major traffic switches, start/finish milestones for each phase or stage of work, or related work to be performed by the Department or other involved parties.

d) A log identifying the schedule constraints used in the Progress Schedule and reason for using each constraint.

e) A description of the calendar(s) used in the Progress Schedule to indicate the Calendar ID, number of work days per week, number of shifts per day, and number of hours per day as well as the anticipated number of non-working days per month for each calendar with considerations, as applicable, for holidays, normal weather conditions; as well as for seasonal or other known or specified constraints and restrictions (i.e. traffic, local events, environmental, permits, utility, etc.).

f) A description of any known problems or anticipated issues that may impact the schedule; and any actions taken, proposed, or needed to correct the problems.

2. Progress Schedule Update Narrative: The Progress Schedule Update Narrative shall include the following written information:

a) A description of the current status of the project in terms of the current actual percent complete by total earnings relative to the SOR planned percent complete; as well as the scheduled completion dates of the interim milestone(s) and project completion.

b) A description of any deviations from scheduled performance in terms of the scheduled completion dates of the interim milestone(s) and project completion since the previous schedule submission, including a statement explaining why any of the schedule milestone date(s) is forecast to occur after the specified date(s).

c) A description of the work performed since the previous Progress Schedule submission and any deviations from the work scheduled.

d) A description of major changes in the Contractor's work plan in terms of sequence of construction, shifts, manpower, equipment, or materials.

e) A description of any deviations in project critical path since the previous Progress Schedule submission.

f) A listing of adverse weather dates and number of days lost this period due to adverse weather or conditions resulting from adverse weather. List the activities affected and any impacts to the critical path.

g) A description of problems encountered or anticipated since the previous Progress Schedule submission, including an explanation of any corrective actions taken or required to be taken.

h) A description of work planned for the next update period and actions to be taken by the Department or other involved parties.

V. REPORTING AND SUBMITTAL REQUIREMENTS FOR PROGRESS SCHEDULE SUBMISSIONS

Unless directed otherwise by the Engineer, the Contractor shall submit for each Progress Schedule submission the following submittal items. Each electronic file submittal shall have a unique file name prefixed by the Contract ID to identify the Contract, submission type and order of submission, and date of submittal (e.g. C00012345B01_B-1_12-30-10.xer, C00012345B01_U-1_1-10-11.xer, etc.). The Progress Schedule submittals shall include:

1. A transmittal letter to the Engineer, identifying the date of submittal and which Progress Schedule is being submitted for review.

2. Two (2) sets of data compact disks (CD) containing the electronic working export file copy of the Progress Schedule in an "XER" file format in version 6.2 or lower. Each CD shall be labeled to indicate the Contract ID, type of submission, filename, and submittal date.

3. Two (2) sets of paper copies of the following schedule reports:

   a) Schedule calculation log.

   b) A legible time-scaled bar-chart plot of the Progress Schedule organized by WBS and sorted by early start to show for each activity: the Activity ID, Activity Name, Original Duration, Remaining Duration, Start and Finish dates, Activity Percent Complete, and Total Float. The bar-chart plot shall identify the project critical path (longest path).

4. Electronic file copies by email of the following:

   a) A working export file of the Progress Schedule in an "XER" file format in version 6.2 or lower.

   b) Electronic "PDF" copy of the tabular Predecessor/Successor report sorted in ascending order by Activity ID to show the following:

      i) Activity ID;
      ii) Activity Name;
      iii) Original Duration;
      iv) Remaining Duration;
      v) Early Start;
      vi) Early Finish;
      vii) Late Start;
      viii) Late Finish;
      ix) Total Float;
      x) Critical (Yes or No);
      xi) Predecessors: Activity ID, Activity Name, Early Start, Early Finish, Relationship Type, Lag, Driving (Yes or No), Constraint, and Constraint Date;
      xii) Successors: Activity ID, Activity Name, Early Start, Early Finish, Relationship Type, Lag, Driving (Yes or No), Constraint, and Constraint Date.

   c) Electronic "PDF" copy of the Progress Schedule Narrative.

   d) Electronic "PDF" copy of the Progress Earnings Schedule S-Curve.

   e) A working file of the Progress Earnings Schedule (VDOT Form C-13C).

VI. FAILURE TO SUBMIT PROGRESS SCHEDULES

The Engineer will take necessary actions according to the following for failure on the part of the Contractor to submit the required Progress Schedules:

1. If the Contractor fails to submit his/her complete Preliminary Progress Schedule at least two (2) business days prior to the Scheduling Conference, the Contractor shall not commence Work, with the exception of project start-up activities such as submittals, mobilization, surveying, construction access and signage, erosion and sedimentation controls, etc., until after seven (7) calendar days from the date the Contractor submits his/her complete Preliminary Progress Schedule, unless otherwise approved in writing by the Engineer.

2. If the Contractor fails to submit his/her complete Baseline Progress Schedule within thirty (30) calendar days after the NTP date or as approved by the Engineer, the Engineer will delay approval of the Contractor's next monthly progress estimate following the due date of the Baseline Progress Schedule until such time as the Contractor has satisfied the submittal requirements.

3. If the Progress Schedule submission is deemed unacceptable by the Engineer; and the Contractor fails to submit an acceptable Progress Schedule within fourteen (14) calendar days after the Engineer's request, the Engineer will delay approval of the Contractor's next monthly progress estimate following the due date of the Progress Schedule until such time as the Contractor has satisfied the submittal requirements.

4. If the Contractor fails to provide a Progress Schedule Update or if a Revised Progress Schedule is required as specified herein and the Contractor fails to provide such a Progress Schedule, the Engineer will delay approval of the Contractor's next monthly progress estimate following the due date of the Progress Schedule until such time as the Contractor has satisfied the submittal requirements.

5. If the Contractor fails to provide an acceptable Final As-built Progress Schedule as specified, the Engineer will delay approval for payment of the Contractor's final progress estimate until such time as the Contractor has satisfied the submittal requirements.

Please note: Delays resulting from the Contractor's failure to provide the Progress Schedule according to the requirements set forth herein will not be considered just cause for extension of the Contract time limit or for additional compensation.

VII. REVIEW AND ACCEPTANCE

The Engineer will review all Progress Schedule submissions within fourteen (14) calendar days of receipt of the Contractor's complete submittal, unless subsequent review meetings are necessary, as determined by the Engineer. The Engineer's review for acceptance will not commence until all required submittal items and schedule information as defined herein are provided. Acceptance by the Engineer will be based <u>only</u> on <u>completeness</u> and <u>conformance</u> with the Contract.

If the Contractor's Progress Schedule submission is deemed to be acceptable, the Engineer will respond with a written notice of acceptance, which may include comments or minor concerns on the submission and/or a request for clarification or justification. When the Engineer's response include any comments, concerns, or request for clarification or justification, the Contractor shall respond accordingly within seven (7) calendar days of receipt of the Engineer's response. The Contractor's response may include a resubmission of the Progress Schedule to address the Engineer's comments or concerns or provide clarification or justification accordingly.

If the Contractor's Progress Schedule submission is deemed to be unacceptable, the Engineer will issue a written notification of non-conformance, which will include a request for resubmission and comments describing the deficiencies prompting the Engineer's decision. At the Engineer's discretion, the Contractor may be required to attend a schedule review meeting to discuss the issues prompting the Engineer's decision or to facilitate review and acceptance of the Progress Schedule submission.

When the Progress Schedule submission is deemed by the Engineer to be unacceptable, the Contractor shall revise and re-submit the Progress Schedule submission accordingly, within seven (7) calendar days of receipt of the Engineer's response.

Review and acceptance by the Engineer will not constitute a waiver of any Contract requirements and will in no way assign responsibilities of the work plan, scheduling assumptions, and validity of the schedule to the Department. Failure of the Contractor to include in the Progress Schedule any element of work required by the Contract for timely completion of the project will not excuse the Contractor from completing the Work within the Contract specified interim milestone(s) or the Contract time limit, as applicable.

VIII. MONITORING THE WORK AND ASSESSING PROGRESS

A. Monitoring the Work – The Engineer will monitor the Work regularly to identify deviations from the Contractor's scheduled performance relative to the SOR. The Contractor shall notify the Engineer at least two (2) working days in advance of any changes in the Contractor's planned operations or critical stage work requiring Department oversight or inspection. The Contractor shall attend a monthly progress schedule meeting with the Engineer on a day agreed to by the Contractor and the Engineer. The Contractor shall furnish his/her detailed 30-day look-ahead schedule at the progress meeting and shall be prepared to discuss the current status of the Work and planned operations for the following thirty (30) calendar days. The 30-day look-ahead schedule shall be based on the Contractor's current monthly Progress Schedule Update.

B. Progress Evaluation – Progress will be evaluated by the Engineer at the time of the monthly progress estimate relative to the SOR. The Contractor's actual progress will be considered unsatisfactory if any one of the following conditions occurs:

1. The actual total earnings to date percentage for work completed, based on the Contractor's progress payment estimate, falls behind the SOR planned cumulative earnings percentage by more than ten (10) percentage points. If the Progress Earnings Schedule is based on a cost-loaded Progress Schedule, then the unsatisfactory progress threshold will be based on falling behind the SOR planned cumulative late dates earnings percentage. Payments for Stored Materials, Materials on Hand, or Adjustments (asphalt, fuel, etc.) shall not be included in the actual progress earnings.

2. The calculated completion date of a Contract interim milestone is later than the specified completion date by more than fourteen (14) calendar days.

3. The calculated project completion date is later than the Contract fixed completion date by more than thirty (30) calendar days.

C. Progress Deficiency and Schedule Slippage – When the Contractor's actual progress is trending toward unsatisfactory status, the Engineer will request a meeting with the Contractor to discuss any actions taken or required by the Contractor to reverse this trend and to correct the progress deficiency or schedule slippage.

When the Contractor's actual progress is deemed unsatisfactory as defined by any one of the conditions listed under **Progress Evaluation** of this provision, the Engineer will issue a written notice of unsatisfactory performance to advise the Contractor that five (5) percent retainage of the monthly progress estimate is being withheld and will continue to be withheld as described in Section 109.08(c), for each month the Contractor's actual progress is determined to be unsatisfactory, unless there is a pending decision by the Engineer on a request for modification of the Contract for which the Contractor has previously provided documentation as required.

When the Contractor fails to respond with good faith efforts as described herein to restore satisfactory progress, the Engineer will issue a notice to indicate that he may recommend the Contractor be temporarily disqualified from bidding on Contracts with the Department as described in Section 102.08 of the Specifications, if progress remains unsatisfactory at the time of preparation of the next monthly progress estimate following the Engineer's notice. Prior to recommendation for removal from the list of pre-qualified bidders, the Engineer will allow the Contractor fourteen (14) calendar days from the date of the unsatisfactory performance notice to respond. Such "good faith" efforts shall be provided in sufficient detail to allow the Engineer to fully evaluate the Contractor's plans for recovery. As an example of good faith efforts, the Contractor may submit to the Engineer, a proposed recovery plan in the form of a Progress Schedule Update and a written statement to describe the Contractor's proposed actions and timeframe to correct the progress deficiency or schedule slippage. The Contractor may also submit to the Engineer a written explanation and supporting documentation to establish that such delinquency was attributable to conditions beyond his/her control. Any schedule adjustments resulting from a recovery plan will be reviewed according to Section VII, but the modified Progress Schedule Update shall not replace the current SOR.

When the Engineer determines the Contractor's progress is again satisfactory the five (5) percent retainage previously withheld will be released to the Contractor according to the provisions of Section 109.08 (c) of the Specifications.

If the Contractor is temporarily disqualified from bidding on Contracts with the Department, the Contractor will not be reinstated until either the Engineer deems that his/her progress has improved to the extent that the Work can be completed within the Contract time limit or the project has received final acceptance according to the provisions of Section 108.09.

IX. MEASUREMENT AND PAYMENT

Required Progress Schedule submissions will be measured and paid for according to the following:

A. Basis of Payment – Progress payments will be made according to the following:

1. Progress payments for the Baseline Progress Schedule pay item will be made as follows:

    a) A twenty-five (25) percent of the Contract bid item lump sum amount will be made upon acceptance of the Preliminary Progress Schedule submission.

b) A seventy-five (75) percent of the Contract bid item lump sum amount will be made upon acceptance of the Baseline Progress Schedule submission. When a Baseline Progress Schedule is provided in lieu of a Preliminary Progress Schedule, a payment of one hundred (100) percent of the Contract bid item lump sum amount will be made upon acceptance of the Baseline Progress Schedule submission.

2. Progress payments for the Progress Schedule Update pay item will be made as follows:

a) Progress payments of one each (1 EA) at the Contract bid item unit price will be made upon acceptance of the Progress Schedule Update submission.

b) A Revised Progress Schedule may be required in lieu of and paid for upon acceptance as a Progress Schedule Update, as determined by the Engineer. When a Revised Progress Schedule is required by the Engineer, in addition to a regular Progress Schedule Update submission, progress payments of one each (1 EA) at the Contract bid item unit price will be made under the pay item for Progress Schedule Updates upon acceptance of the Revised Progress Schedule submission.

c) Upon approval, the SIA shall be incorporated into the Progress Schedule Update or Revised Progress Schedule, as directed by the Engineer, and paid for as a Progress Schedule Update. When a SIA is required in addition to a regular Progress Schedule Update submission, progress payment of one each (1 EA) at the Contract bid item unit price will be made upon approval under the pay item for Progress Schedule Update.

d) Progress payments of one each (1 EA) at the Contract unit price will be made upon acceptance of the Final As-built Schedule submission.

3. No separate measurement and payment will be made for attendance of the Scheduling Conference, progress meetings or other schedule related meetings. All costs associated with attendance of the scheduling meetings will be considered incidental.

B. **Payment Items –** Payments for all associated costs to attend schedule meetings, prepare, update, revise, and/or furnish the Progress Schedule will made under the following pay items:

Pay Item	**Pay Unit**
Baseline Progress Schedule	Lump Sum
Progress Schedule Update	Each

SP109-000100-02

VIRGINIA DEPARTMENT OF TRANSPORTATION
SPECIAL PROVISION FOR
ASPHALT MATERIAL PRICE ADJUSTMENT

April 28, 2017

All asphalt material contained in the attached master listing of eligible bid items and designated by pay items in the contract will be price adjusted according to the provisions as set forth herein. Other items will not be adjusted, except as otherwise specified in the contract. If new pay items which contain asphalt material are established by Work Order, they will not be subject to Price Adjustment unless specifically designated in the Work Order to be subject to Price Adjustment.

Each month, the Department will publish an average state-wide PG 64S-22 f.o.b. price per ton and an average PG 64E-22 f.o.b. price per ton developed from the average terminal prices provided to the Department from suppliers of asphalt cement to contractors doing work in Virginia. The Department will collect terminal prices from approximately 12 terminals each month. These prices will be received once each month from suppliers on or about the last weekday of the month. The high and low prices will be eliminated and the remaining values averaged to establish the average statewide price for the following month. The monthly state-wide average price will be posted on the Construction Division website on or about the first weekday of the following month. In the event the average prices were to change by 10 percent or more of the Base Index during the middle of the month the Contractor can submit a letter to the Department and supplier that provides evidence of the difference in price. Upon receipt of the letter consideration will be given to extend additional adjustments as deemed necessary.

This monthly statewide average price will be the Base Index for all contracts on which bids are received during the calendar month of its posting and will be the Current Index for all asphalt placed during the calendar month of its posting. In the event an index changes radically from the apparent trend, as determined by the Engineer, the Department may establish an index which it determines to best reflect the trend.

The amount of adjustment applied will be based on the difference between the contract Base Index and the Current Index for the applicable calendar month during which the work is performed. The quantity of asphalt cement for asphalt concrete pavement to which adjustment will be applied will be the quantity based on the percent of asphalt cement shown on the appropriate approved job mix formula.

Adjustment of any asphalt material other than PG 64S-22 and PG 64E-22 will be based on the indexes for PG 64S-22.

The quantity of asphalt emulsions to which adjustment will be applied will be the quantity based on 65 percent residual asphalt.

Price adjustment will be shown as a separate entry on the monthly progress estimate; however, such adjustment will not be included in the total cost of the work for progress determination or for extension of contract time.

Any apparent attempt to unbalance bids in favor of items subject to price adjustment or failure to submit required cost and price data as noted hereinbefore may result in rejection of the bid proposal.

ORDER NO.: L89
CONTRACT ID. NO.: C000109813C01B

VIRGINIA DEPARTMENT OF TRANSPORTATION
MASTER LISTING OF
ASPHALT MATERIAL ITEMS ELIGIBLE FOR PRICE ADJUSTMENT

ITEM	DESCRIPTION	UNITS	SPECIFICATION
10062	Asphalt-Stab. Open-Graded Material	Ton	313
10416	Liquid Asphalt	Gal	311 312
10417	Tack Coat	Gal	310
10420	Blotted Seal Coat Ty. B	SY	ATTD
10422	Blotted Seal Coat Ty. C	SY	ATTD
10423	Blotted Seal Coat Ty. C-1	SY	ATTD
10424	Blotted Seal Coat Ty. D	SY	ATTD
10598	NS Asphalt Concrete	Ton	315
10603	Asphalt Concrete Ty. SM-19.0A	Ton	315
10604	Asphalt Concrete Ty. SM-19.0D	Ton	315
10605	Asphalt Concrete Ty. SM-19.0E (76-22 or 64E)	Ton	315
10606	Asphalt Concrete Ty. SM-9.5	Ton	315
10607	Asphalt Concrete Ty. SM-12.5A	Ton	315
10608	Asphalt Concrete Ty. SM-12.5D	Ton	315
10609	Asphalt Concrete Ty. SM-12.5E (64E-22)	Ton	315
10610	Asphalt Concrete Ty. IM-19.0A	Ton	315
10611	Asphalt Concrete Ty. IM-19.0D	Ton	315
10612	Asphalt Conc. Base Cr. Ty. BM-25.0	Ton	315
10613	Asphalt Concrete Ty. BM-37.5	Ton	315
10614	Asphalt Concrete Ty. IM-19.0E (76-22 or 64E)	Ton	315
10635	Asphalt Concrete Ty. SM-9.5A	Ton	315
10636	Asphalt Concrete Ty. SM-9.5D	Ton	315
10637	Asphalt Concrete Ty. SM-9.5E (64E-22)	Ton	315
10639	Asphalt Concrete Ty. SM-19.0	Ton	315
10642	Asphalt Concrete Ty. BM-25.0A	Ton	315
10643	Asphalt Concrete Ty. BM-25.0D	Ton	315
10650	Stone Matrix Asphalt SMA-9.5(64H-22)	Ton	317
10651	Stone Matrix Asphalt SMA-9.5(64E-22)	Ton	317
10652	Stone Matrix Asphalt SMA-12.5(64H-22)	Ton	317
10653	Stone Matrix Asphalt SMA-12.5(64E-22)	Ton	317
10654	Stone Matrix Asphalt SMA-19.0(64H-22)	Ton	317
10655	Stone Matrix Asphalt SMA-19.0(64E-22)	Ton	317
10701	Liquid Asphalt Coating	SY	ATTD
12505	Asphalt Concrete Curb Backup Material	Ton	315
13240	Asphalt Concrete Sidewalk	Ton	504
16110	Emul. Asph. Slurry Seal Type A	SY	ATTD
16120	Emul. Asph. Slurry Seal Type B	SY	ATTD
16130	Emul. Asph. Slurry Seal Type C	SY	ATTD
16144	Latex Mod. Emul. Treat. Type B	Ton	ATTD
16145	Latex Mod. Emul. Treat. Type C	Ton	ATTD
16146	Latex Mod. Emul. Treat. Rutfilling	Ton	ATTD
16161	Modified Single Seal	SY	ATTD
16162	Modified Double Seal	SY	ATTD
16249	Nontracking Tack Coat	Gal.	ATTD

ORDER NO.: L89
CONTRACT ID. NO.: C000109813C01B

ITEM	DESCRIPTION	UNITS	SPECIFICATION
16250	Liquid Asphalt Matl. CMS-2 (Mod)	Gal	ATTD
16251	Liquid Asphalt Matl. CMS-2	Gal	ATTD
16252	Liquid Asphalt Matl. CRS-2	Gal	ATTD
16253	Liquid Asphalt Matl. CRS-2H	Gal.	ATTD.
16254	Liquid Asphalt Matl. RC-250	Gal	ATTD
16256	Liquid Asphalt Matl. RC-800	Gal	ATTD
16257	NS Liquid Asphalt Matl.	Gal	ATTD
16260	Liquid Asphalt Matl. CRS-2L	Gal	ATTD
16325	NS Asphalt Concrete	Ton	N/A
16326	Asphalt Concrete Ty. SM-4.75A	Ton	315
16327	Asphalt Concrete Ty. SM-4.75D	Ton	315
16328	Asphalt Concrete Ty. SM-4.75E	Ton	315
16330	Asphalt Concrete Ty. SM-9.0A	Ton	315
16335	Asphalt Concrete Ty. SM-9.5A	Ton	315
16337	Asph. Conc. Ty. SM-9.5ASL (Spot Level)	Ton	315
16340	Asphalt Concrete Ty. SM-9.5D	Ton	315
16342	Asph. Conc. Ty. SM-9.5DSL (Spot Level)	Ton	315
16345	Asphalt Concrete Ty. SM-9.5E (64E-22)	Ton	315
16350	Asphalt Concrete Ty. SM-12.5A	Ton	315
16352	Asph. Con. Ty. SM-12.5ASL (Spot Level)	Ton	315
16355	Asphalt Concrete Ty. SM-12.5D	Ton	315
16357	Asph. Con. Ty. SM-12.5DSL (Spot Level)	Ton	315
16360	Asphalt Concrete Ty. SM-12.5E (64E-22)	Ton	315
16362	Asphalt Concrete Ty. SM-19.0A	Ton	315
16363	Asphalt Concrete Ty. SM-19.0D	Ton	315
16364	Asphalt Concrete Ty. SM-19.0E (76-22 or 64E)	Ton	315
16365	Asphalt Concrete Ty. IM-19.0A	Ton	315
16370	Asphalt Concrete Ty. IM-19.0D	Ton	315
16371	Asphalt Concrete Ty. IM-19.0E (76-22 or 64E)	Ton	315
16373	Asphalt Concrete Ty. IM-19.0A (T)	Ton	315
16374	Asphalt Concrete Ty. IM-19.0D (T)	Ton	315
16377	Asphalt Concrete Ty. BM-37.5	Ton	315
16379	Asphalt Concrete Ty. IM-19.0T	Ton	315
16390	Asphalt Concrete Ty. BM-25.0A	Ton	315
16392	Asphalt Concrete Ty. BM-25.0D	Ton	315
16395	Asphalt Concrete Ty. BM-25.0A (T)	Ton	315
16397	Asphalt Concrete Ty. BM-25.0D (T)	Ton	315
16400	Stone Matrix Asphalt SMA-9.5(64H-22)	Ton	ATTD
16401	Stone Matrix Asphalt SMA-9.5(64E-22)	Ton	ATTD
16402	Stone Matrix Asphalt SMA-12.5(64H-22)	Ton	ATTD
16403	Stone Matrix Asphalt SMA-12.5(64E-22)	Ton	ATTD
16404	Stone Matrix Asphalt SMA-19.0(64H-22)	Ton	ATTD
16405	Stone Matrix Asphalt SMA-19.0(64E-22)	Ton	ATTD
16490	Hot Mix Asphalt Treatment	Ton	ATTD
16500	Surf.Preparation & Restoration Type I	Ton	ATTD
16502	Surf.Preparation & Restoration Type II	Ton	ATTD
16504	Surf.Preparation & Restoration Type III	Ton	ATTD

ORDER NO.: L89
CONTRACT ID. NO.: C000109813C01B

ITEM	DESCRIPTION	UNITS	SPECIFICATION
67201	NS Asphalt Concrete Overlay	Ton	315
67210	NS Asphalt Concrete	Ton	315
68240	NS Asphalt Concrete	Ton	315

SP109-000110-00

VIRGINIA DEPARTMENT OF TRANSPORTATION
SPECIAL PROVISION FOR
OPTIONAL ADJUSTMENT FOR FUEL

July 1, 2015; Reissued July 12, 2016

The Department will adjust monthly progress payments up or down as appropriate for cost changes in fuel used on specific items of work identified in this provision. The Department will provide a master listing of standard bid items eligible for fuel adjustment on its website.

Included with this proposal is a listing of standard bid items the Department has identified as eligible for fuel adjustment on this project(s) as well as the respective fuel factors per pay unit for those items. Only items on this listing will be eligible for adjustment. The fuel usage factor for each item is considered inclusive of all fuel usage. Generally, non-standard pay items are not eligible for fuel adjustment.

The listing of eligible items applicable to this particular project is shown on Form C-21B "Bid Items Eligible for Fuel Adjustment" included with the bidding documents. The Bidder may choose to have fuel adjustment applied to any or all eligible items on this project's listing by designating the items for which the fuel adjustment will apply. The Bidder's selection of items for fuel adjustment may not be changed once he has submitted Form C-21B to the Department.

In order to be eligible for fuel adjustment under this provision, the apparent lowest responsive and responsible Bidder shall clearly identify on Form C-21B those pay items he chooses to have fuel adjustment applied on. Within 21 days after the receipt of bids the apparent successful Bidder shall submit his designated items on Form C-21B to the Contract Engineer. Items the successful Bidder chooses for fuel adjustment must be designated by writing the word "Yes" in the column titled "Option" by each bid item chosen for fuel adjustment. The successful Bidder's designations on Form C-21B must be written in ink or typed, and signed by this Bidder to be considered complete. Items not properly designated or left blank on the Bidder's C-21B "Bid Items Eligible for Fuel Adjustment" form may be not considered for adjustment. If the apparent successful Bidder fails to return his Form C-21B within the timeframe specified, items will not be eligible for fuel adjustment on this project.

The monthly index price to be used in the administration of this provision will be calculated by the Department from the Diesel fuel prices published by the U. S. Department of Energy, Energy Information Administration on highway diesel prices, for the Lower Atlantic region. The monthly index price will be the price for diesel fuel calculated by averaging each of the weekly posted prices for that particular month.

For the purposes of this provision, the base index price will be calculated using the data from the month preceding the receipt of bids. The base index price will be posted by the Department at the beginning of the month for all bids received during that month.

The current index price will be posted by the Department and will be calculated using the data from the month preceding the particular estimate being vouchered for payment.

The current monthly quantity for eligible items of work selected by the Contractor for fuel adjustment will be multiplied by the appropriate fuel factor to determine the gallons of fuel to be cost adjusted. The amount of adjustment per gallon will be the net difference between the current index price and the base index price. Computation for adjustment will be made as follows:

$$S = (E - B)\ QF$$

Where; S = Monetary amount of the adjustment (plus or minus)
B = Base index price
E = Current index price
Q = Quantity of individual units of work
F = Appropriate fuel factor

Adjustments will not be made for work performed beyond the original contract time limit unless the original time limit has been changed by an executed Work Order.

If new pay items are added to this contract by Work Order and they are listed on Department's master listing of eligible items, the Work Order must indicate which of these individual items will be fuel adjusted; otherwise, those items will not be fuel adjusted. If applicable, designating which new pay items will be added for fuel adjustment must be determined during development of the Work Order and clearly shown on Form C-10 Work Order. The Base Index price on any new eligible pay items added by Work Order will be the Base Index price posted for the month in which bids were received for that particular project. The Current Index price for any new eligible pay items added by Work Order will be the Index price posted for the month preceding the estimate on which the Work Order is paid.

When quantities differ between the last monthly estimate prepared upon final acceptance and the final estimate, adjustment will be made using the appropriate current index for the period in which that specific item of work was last performed.

In the event any of the base fuel prices in this contract increase more than 100 percent (i.e. fuel prices double), the Engineer will review each affected item of work and give the Contractor written notice if work is to stop on any affected item of work. The Department reserves the right to reduce, eliminate or renegotiate the unit price for remaining portions of affected items of work.

Any amounts resulting from fuel adjustment will not be included in the total cost of work for determination of progress or for extension of contract time.

SP109-000120-00

VIRGINIA DEPARTMENT OF TRANSPORTATION
SPECIAL PROVISION FOR
PRICE ADJUSTMENT FOR STEEL

June 15, 2015; Reissued July 12, 2016

The Department will adjust monthly progress payments up or down as appropriate for cost changes in steel used on specific items of work identified in the Contract according to this provision. This Special Provision provides a master listing of standard bid items the Department has determined are eligible for steel price adjustment.

An automatically generated *project-specific* listing of *standard* bid items the Department has identified as eligible for steel price adjustment is included with the bidding proposal. Only items on this listing will be eligible for steel price adjustment. Generally, *non-standard* pay items will not be eligible for steel price adjustment unless such steel items are project-specific modifications of items normally eligible, are clearly and specifically identified by a separate and distinct steel pay item and the quantities present on the project constitute major items of the work. These items may be addressed by project specific provisions and their related pay items designated as being eligible in the bid proposal. Items eligible for steel price adjustment for a particular project will be shown on Form C-21C "Bid Items Eligible for Steel Price Adjustment" and included with the bidding documents. The Bidder may choose to have steel price adjustment applied to any, all or none of the eligible items shown on Form C-21C. The Bidder's selection of items for steel price adjustment or non-selection (non-participation) may not be changed once he has submitted Form C-21C to the Department

The Contractor shall use Form C-21C to submit to the State Contract Engineer, no later than 15 calendar days after the date of Contract Award letter, those pay items he chooses to have steel price adjustment applied on. Items the Contractor chooses for steel price adjustment must be designated by writing the word "Yes" in the column titled "Option" by each bid item chosen for adjustment. The Contractor's designations on Form C-21C must be written in ink or typed, and signed by the Contractor to be considered complete. Items not properly designated, or designated with "No" or left blank on the Contractor's C-21C "Bid Items Eligible for Steel Price Adjustment" form will automatically not be considered for adjustment. No steel items will be eligible for steel price adjustment on this project if the Contractor fails to return his Form C-21C on time.

Please note: Inventoried materials from the listing of eligible items are specifically excluded for consideration. Items from the listing of eligible items for which the Contractor has requested payment as Material on Hand according to Section 109.09 are also specifically excluded for consideration past the delivery date to the fabricator. This provision also does not allow for price adjustment for embedded steel where the steel item is a component of the finished bid item and there is no separate or distinct payment for the steel item or for steel used for pre-tensioned or post-tensioned precast components where furnishing steel is included in the unit price of the finished bid item.

This provision shall apply only to material cost changes that occur between the date of the receipt of bids by the Department and the date the material is shipped to the fabricator. The Contractor, subcontractor and/or supplier are required to place their purchase order for the steel items designated in this contract for price adjustment within 30 calendar days after the date of execution of this contract with the Department. The timeliness of the Contractor's response is also to ensure the receipt of such items in a timely manner that shall not adversely affect his progress schedule or contract completion date. The items shall further be specifically stored, labeled, or tagged, recognizable by color marking, and identifiable by project for inspection and audit verification immediately upon arrival at the fabricator.

The Contractor shall submit documentation to the appropriate District Construction Engineer for all items listed in the Contract for which it is requesting a steel price adjustment. This documentation shall consist of material price quotes, bid papers, or other similar type of documentation satisfactory to the Department, and support the completion of the form establishing the average price per pound for the eligible steel bid item. The Contractor must use the format as shown with this provision; no other format for presenting this information will be permitted. The Contractor shall certify that all items of documentation are original and were used in the computation of the amount bid for the represented eligible pay items for the month bids were opened. This documentation shall support the base line material price ("Base Price") of the steel item only. No adjustment will be made for changes in other components of the contract unit bid price, including, but not limited to, fabrication, shipping, storage, handling, and erection.

The Contractor will not be eligible for price adjustment of steel items if he fails to submit specifically required information (i.e., purchase order, price data, bill of lading, material information or other requested information) as noted herein.

Price adjustment of each qualifying item will only be considered if there is an increase or decrease in the cost of eligible steel materials in excess of 10 percent up to a maximum of 60 percent from the Base Price when compared with the latest published price index ("Price Index") in effect at the time material is shipped to the fabricator.

The Price Index the Department is using is based on The U.S. Department of Labor, Bureau of Labor Statistics, Producers Price Index (PPI), which measures the average price change over time of the specific steel eligible item from the perspective of the seller of goods. The specific Producers Price Index (PPI) to be used to adjust the price for the eligible VDOT steel items is shown in the table below. **Please note**: The Producers Price Index (PPI) is subject to revision 4 months after original publication, therefore, price adjustments and payments will not be made until the index numbers are finalized.

Items under consideration for price adjustment will be compared to the steel category index items and the corresponding I.D. numbers shown in the table attached to the end of this provision.

The price adjustment will be determined by comparing the percentage of change in index value beyond 10 percent above or below the index on the bid date to the index value on the date the steel material is shipped to the fabricator (Please see included sample examples). Weights and date of shipment must be documented by a bill of lading provided to the Department. The final price adjustment dollar value will be determined by multiplying this percent increase or decrease in the index (after 10%) by the represented quantity of steel shipped, by the Base Price per pound subject to the limitations herein.

Price increase/decrease will be computed as follows:

$$A = B \times P \times Q$$

Where;
- A = Steel price adjustment in lump sum dollars
- B = Average weighted price of steel submitted with bid on project in $ per pound
- P = Adjusted percentage change in PPI average from shipping date to bid date minus 10% (0.10) threshold
- Q = Total quantity of steel in pounds shipped to fabricator for specific project

Delays to the work caused by steel shortages may be justification for a contract time extension but will not constitute grounds for claims for standby equipment, extended office overhead, or other costs associated with such delays.

The Engineer will determine, and specify in the Work Order, the need for application of the adjustments herein to extra work on an individual basis.

This price adjustment is capped at 60 percent. This means the maximum "P" value for increase or decrease that can be used in the above equation is 50% (60%-10% threshold).

Calculations for price adjustment shall be shown separate from the monthly progress estimate and will not be included in the total cost of work for determination of progress or for extension of contract time.

Any apparent attempt to unbalance bids in favor of items subject to price adjustment may result in rejection of the bid proposal.

20-Jan-05

Sample Form to be turned in for Steel Price Adjustment Provision
(All prices to be supported by project-specific quotes)

BID DATE 28-Apr-04

Bid Item 61720 High Strength Structural Steel

Supplier	Description of material	Unit price f.o.b supplier $/lbs	Quantity In lbs.	Price Extension	Date of Quote
XYZ mill	Structural beams Various sizes (see quote)	$0.28	1,200,000	$336,000.00	21-Apr-04
ABC distributing	Various channel & angle shapes (see quote)	$0.32	35,000	$11,200.00	20-Apr-04
		Total	1,235,000	$347,200.00	
		Average weighted price =		$0.2816	

Note: All prices are to include any surcharges on materials quoted as if they are shipped in the month the bid is submitted. Vendors must include this surcharge along with their base price on their quotes.

v

ORDER NO.: L89
CONTRACT ID. NO.: C000109813C01B

20-Jan-05

Sample Calculation of a Price Adjustment (increase)

Project bid on April 28, 2004.

Project has 450,000 lb. of structural steel.

Orders placed in timely manner and according to contract.

Contractor's *f.o.b. supplier price for the structural steel in bid is $0.2816 per pound. *free on board

Adjusted** BLS Producers Price Index (PPI) most recently published average at time of bid is 139.6.
** final change
after 4 months

All steel shipped to fabricator in same month, October 2004.

Adjusted BLS Producers Price Index (PPI) most recently published average for month of October is 161.1

Adjustment formula is as follows:

A = B X P X Q

Where;
- A = Steel price adjustment in lump sum dollars
- B = Average weighted price of steel submitted with bid on project in $ per pound
- P = Adjusted percentage change in PPI average from shipping date to bid date minus 10% (0.10) threshold
- Q = Total quantity of steel shipped to fabricator in October 2004 for this project in pounds

B = $0.2816

P = (161.1- 139.6)/139.6 – 0.10 = 0.054

Q = 450,000 lb.

A = 0.2816 x 0.054 x 450,000

A = $6,842.88 pay adjustment to Contractor

ORDER NO.: L89
CONTRACT ID. NO.: C000109813C01B

20-Jan-05

Sample Calculation of a Price Adjustment (decrease)

Project bid on April 28, 2004.

Project has 450,000 lb. of structural steel.

Orders placed in timely manner and according to contract.

Contractor's *f.o.b. supplier price for structural steel in bid is $0.2816 per pound. *free on board

Adjusted BLS Producers Price Index (PPI) most recently published average at time of bid is 156.6.

All steel shipped to fabricator in same month, October 2004.

Adjusted BLS Producers Price Index (PPI) most recently published average for month of October is 136.3

Adjustment formula is as follows:

A = B X P X Q

Where;
- A = Steel price adjustment in lump sum dollars
- B = Average weighted price of steel submitted with bid on project in $ per pound
- P = Adjusted percentage change in PPI average from shipping date to bid date minus 10% (0.10) threshold
- Q = Total quantity of steel shipped to fabricator in October 2004 for this project in pounds

B = $0.2816

P = (156.6 – 136.3)/156.6 – 0.10 = 0.030

Q = 450,000 lb.

A = 0.2816 x 0.030 x 450,000

A = $3,801.60 credit to Department

ORDER NO.: L89
CONTRACT ID. NO.: C000109813C01B

MASTER LISTING

STANDARD BID ITEMS ELIGIBLE FOR STEEL PRICE ADJUSTMENT

Sept. 24, 2008	rev # 1added 4 corrosion resistant re-bar items.	
Dec. 4, 2008	rev # 2 deleted item 68138 straighten structural steel	
January 14, 2009	rev # 3 identified BLS WPU used in $ adjustment	**BLS Series I. D.**
March 18, 2009	added items 61813,68109 & 68110	

ITEM NUMBER	ITEM DESCRIPTION	UNITS	Number WPU used in $ adjust.
00519	SHEET PILE, STEEL	SF	avg. 1017 & 101
00540	REINF. STEEL	LB	101704
00541	CORROSION RESISTANT REINF.STEEL CL. I	LB	101704
00542	EPOXY COATED REINF. STEEL	LB	101704
00560	STRUCTURAL STEEL JB-1	LB	avg. 1017 & 101
11030	REINF. STEEL BRIDGE APPR. SLAB	LB	101704
11181	PATCH.HYDR.CEM.CONC. PAVE.	SY	101704
13290	GUARDRAIL GR-8 (NCHRP 350 TL-3)	LF	avg. 1017 & 101
13292	GUARDRAIL GR-8A (NCHRP 350 TL-3)	LF	avg. 1017 & 101
13294	GUARDRAIL GR-8B (NCHRP 350 TL-3)	LF	avg. 1017 & 101
13310	GUARDRAIL TERMINAL GR-6 (NCHRP 350)	LF	avg. 1017 & 101
13312	GUARDRAIL TERMINAL GR-7 (NCHRP 350)	EA	avg. 1017 & 101
13315	GUARDRAIL TERMINAL GR-11	EA	avg. 1017 & 101
13320	GUARDRAIL GR-2	LF	avg. 1017 & 101
13323	GUARDRAIL GR-2A	LF	avg. 1017 & 101
13331	RAD. GUARDRAIL GR-2	LF	avg. 1017 & 101
13333	RAD. GUARDRAIL GR-2A	LF	avg. 1017 & 101
13335	GUARDRAIL GR-3	LF	avg. 1017 & 101
13345	ALTERNATE BREAKAWAY CABLE TERMINAL(GR-9)	EA	avg. 1017 & 101
13351	GUARDRAIL GR-8	LF	avg. 1017 & 101
13352	GUARDRAIL GR-8A	LF	avg. 1017 & 101
13353	GUARDRAIL GR-8B	LF	avg. 1017 & 101
13355	GUARDRAIL GR-10	LF	avg. 1017 & 101
13421	MEDIAN BARRIER MB-3	LF	avg. 1017 & 101
13450	MEDIAN BARRIER MB-5	LF	avg. 1017 & 101
13451	MEDIAN BARRIER MB-5A	LF	avg. 1017 & 101
13452	MEDIAN BARRIER MB-5B	LF	avg. 1017 & 101
13545	REINF. STEEL	LB	101704
13594	TRAF. BARR. SER. GUARD RAIL TER. GR-7	EA	avg. 1017 & 101
13594	TRAF.BAR.SER.GD.RAIL TER. GR-7	EA	avg. 1017 & 101
14502	REINFORCING STEEL	LB	101704
15290	PATCH.CEM.CONC.PAVE.TY.CRCP-A	SY	101704
15302	PATCH.CEM.CONC.PAVE. TY. II	SY	101704
15305	PATCH.CEM.CONC.PAVE.TY. IV-A	SY	101704
17323	GUARDRAIL BEAM	LF	avg. 1017 & 101
17325	RADIAL GUARDRAIL BEAM	LF	avg. 1017 & 101
17327	RUB RAIL	LF	avg. 1017 & 101
17342	STEEL TUBE GR-7	EA	avg. 1017 & 101
17348	BREAKAWAY POST GR-7	EA	101704
17353	CABLE GR-3	LF	avg. 1017 & 101
17381	POST (BENT PLATE OR S 75 X 8.5 STEEL) GR	EA	avg. 1017 & 101
22501	FENCE FE-W1	LF	avg. 1017 & 101
22643	FENCE FE-CL	LF	avg. 1017 & 101
22645	FENCE FE-CL VINYL COATED	LF	avg. 1017 & 101
23043	WATER GATE FE-4 TY.III	LF	avg. 1017 & 101

23501	FENCE FE-W1 (FABRIC ONLY)	LF	avg. 1017 & 101
45522	4" STEEL ENCASE. PIPE	LF	101706
45532	6" STEEL ENCASE. PIPE	LF	101706
45562	16" STEEL ENCASE. PIPE	LF	101706
45572	18" STEEL ENCASE. PIPE	LF	101706
45582	24" STEEL ENCASE. PIPE	LF	101706
45584	24" JACKED STEEL ENCASEMENT PIPE	LF	101706
45592	30" STEEL ENCASE. PIPE	LF	101706
50402	SIGN POST STEEL 3"	LF	101706
50404	SIGN POST STEEL 4"	LF	101706
50406	SIGN POST STEEL 6"	LF	101706
50410	SIGN POST STEEL 10"	LF	101706
50412	SIGN POST STEEL 12"	LF	101706
50414	SIGN POST STEEL 14"	LF	101706
50416	SIGN POST STEEL 16"	LF	101706
50418	SIGN POST STEEL 18"	LF	101706
51317	SIG. POLE MP-1 20' ONE ARM 30'	EA	101706
51319	SIG. POLE MP-1 20' ONE ARM 32'	EA	101706
51325	SIG. POLE MP-1 20' ONE ARM 38'	EA	101706
51327	SIG. POLE MP-1 20' ONE ARM 40'	EA	101706
51329	SIG. POLE MP-1 20' ONE ARM 42'	EA	101706
51331	SIG. POLE MP-1 20' ONE ARM 44'	EA	101706
51337	SIG. POLE MP-1 20' ONE ARM 50'	EA	101706
51339	SIG. POLE MP-1 20' ONE ARM 52'	EA	101706
51341	SIG. POLE MP-1 20' ONE ARM 54'	EA	101706
51344	SIG. POLE MP-1 20' ONE ARM 56'	EA	101706
51346	SIG. POLE MP-1 20' ONE ARM 58'	EA	101706
51347	SIG. POLE MP-1 20' ONE ARM 60'	EA	101706
51348	SIG. POLE MP-1 20' ONE ARM 62'	EA	101706
51368	SIG.POLE MP-1 20'TWO ARMS 36'& 42'	EA	101706
51400	SIG.POLE MP-1 CO.LU.ONE ARM 38	EA	101706
51402	SIG.POLE MP-1 CO.LU.ONE ARM 40	EA	101706
51408	SIG.POLE MP-1 CO.LU.ONE ARM 46	EA	101706
51412	SIG.POLE MP-1 CO.LU.ONE ARM 50	EA	101706
51414	SIG.POLE MP-1 CO.LU.ONE ARM 52	EA	101706
51416	SIG.POLE MP-1 CO.LU.ONE ARM 54	EA	101706
51418	SIG.POLE MP-1 CO.LU.ONE ARM 56	EA	101706
51420	SIG.POLE MP-1 CO.LU.ONE ARM 58	EA	101706
51422	SIG.POLE MP-1 CO.LU.ONE ARM 60	EA	101706
55162	LIGHTING POLE LP-1 30'-4'	EA	101706
55163	LIGHTING POLE LP-1 30'-6'	EA	101706
55166	LIGHTING POLE LP-1 30'-12'	EA	101706
55169	LIGHTING POLE LP-1 35'-6'	EA	101706
55171	LIGHTING POLE LP-1 35'-10'	EA	101706
55176	LIGHTING POLE LP-1 40'-8'	EA	101706
55185	LIGHTING POLE LP-2 TYPE A	EA	101706
55186	LIGHTING POLE LP-2 TYPE B	EA	101706
55187	LIGHTING POLE LP-2 TYPE C	EA	101706
55188	LIGHTING POLE LP-2 TYPE D	EA	101706
55189	LIGHTING POLE LP-2 TYPE E	EA	101706
55190	LIGHTING POLE LP-2 TYPE F	EA	101706
55192	LIGHTING POLE LP-2 TYPE H	EA	101706
60452	REINF. STEEL BRIDGE APPR. SLAB	LB	101704
61700	REINF. STEEL	LB	101704
61704	CORROSION RESISTANT REINF. STEEL	LB	101704
61705	EPOXY COATED REINF. STEEL	LB	101704
61711	CORROSION RESISTANT REINF.STEEL CL. I	LB	101704

61712	CORROSION RESISTANT REINF.STEEL CL. II	LB	101704
61713	CORROSION RESISTANT REINF.STEEL CL. III	LB	101704
61750	STRUCT.STEEL HIGH STRG.PLT.GIRDERS	LB	avg. 1017 & 101
61811	STR.STEEL PLATE GIRDER ASTM A709 GRADE50	LB	avg. 1017 & 101
61812	STR.STEEL PLATE GIRDER ASTM A709 GRADE50	LB	avg. 1017 & 101
61813	STR.STEEL PLATE GIRDER ASTM A709 GRADEHPS50W	LB	avg. 1017 & 101
61814	STR.STEEL PLATE GIRDER ASTM A709 GRADEHPS70W	LB	avg. 1017 & 101
61820	STR.STEEL ROLLED BEAM ASTM A709 GRADE 36	LB	avg. 1017 & 101
61821	STR.STEEL ROLLED BEAM ASTM A709 GRADE50	LB	avg. 1017 & 101
61822	STR.STEEL ROLLED BEAM ASTM A709 GRADE50W	LB	avg. 1017 & 101
61990	STEEL GRID FLOOR	SF	avg. 1017 & 101
64110	STEEL PILES 10"	LF	avg. 1017 & 101
64112	STEEL PILES 12"	LF	avg. 1017 & 101
64114	STEEL PILES 14"	LF	avg. 1017 & 101
64768	DRIVING TEST FOR 12" STEEL PILE	LF	avg. 1017 & 101
64778	DRIVING TEST FOR 14" STEEL PILE	LF	avg. 1017 & 101
65200	REINF. STEEL	LB	101704
65204	CORROSION RESISTANT REINF. STEEL	LB	101704
65205	EPOXY COATED REINF. STEEL	LB	101704
65211	CORROSION RESISTANT REINF.STEEL CL. I	LB	101704
65212	CORROSION RESISTANT REINF.STEEL CL. II	LB	101704
65213	CORROSION RESISTANT REINF.STEEL CL. III	LB	101704
67086	PED. FENCE 6'	LF	avg. 1017 & 101
67088	PED. FENCE 8'	LF	avg. 1017 & 101
67089	PED. FENCE 10'	LF	avg. 1017 & 101
68091	CORROSION RESISTANT REINF.STEEL CL. I	LB	101704
68092	CORROSION RESISTANT REINF.STEEL CL. II	LB	101704
68093	CORROSION RESISTANT REINF.STEEL CL. III	LB	101704
68100	REINF. STEEL	LB	101704
68104	CORROSION RESISTANT REINF. STEEL	LB	101704
68105	EPOXY COATED REINF. STEEL	LB	101704
68107	STR.STEEL PLATE GIRDER ASTM A709 GRADE50	LB	avg. 1017 & 101
68108	STR. STEEL PLATE GIRDER ASTM A709 GR50W	LB	avg. 1017 & 101
68109	STR. STEEL PLATE GIRDER ASTM A709 GR.HPS50W	LB	avg. 1017 & 101
68110	STR. STEEL PLATE GIRDER ASTM A709 GR.HPS70W	LB	avg. 1017 & 101
68112	STR.STEEL ROLLED BEAM ASTM A709 GR.36	LB	avg. 1017 & 101
68113	STR.STEEL ROLLED BEAM ASTM A709 GR.50	LB	avg. 1017 & 101
68114	STR.STEEL ROLLED BEAM ASTM A709 GR. 50W	LB	avg. 1017 & 101
68115	STRUCT. STEEL	LB	avg. 1017 & 101
68270	REINF. STEEL BRIDGE APPR. SLAB	LB	101704
69060	SHEET PILES, STEEL	SF	avg. 1017 & 101
69091	CORROSION RESISTANT REINF.STEEL CL. I	LB	101704
69092	CORROSION RESISTANT REINF.STEEL CL. II	LB	101704
69093	CORROSION RESISTANT REINF.STEEL CL. III	LB	101704
69100	REINF. STEEL	LB	101704
69104	CORROSION RESISTANT REINF. STEEL	LB	101704
69105	EPOXY COATED REINF. STEEL	LB	101704
69110	STEEL PILES 10"	LF	avg. 1017 & 101
69112	STEEL PILE 12"	LF	avg. 1017 & 101
69113	DRIVING TEST FOR 12" STEEL PILE	LF	avg. 1017 & 101

SP302-000100-00

VIRGINIA DEPARTMENT OF TRANSPORTATION
SPECIAL PROVISION FOR
RESTORING EXISTING PAVEMENT

July 12, 2016

I. DESCRIPTION

This work shall consist of restoring existing pavement, removed for installation or repair of utilities such as, but not limited to pipe culverts, conduits, water and sanitary sewer items.

II. MATERIALS

Asphalt Concrete shall conform to Section 211 of the Specifications.

Aggregate Subbase material shall conform to Section 208 of the Specifications.

Asphalt Material shall conform to Section 210 of the Specifications.

Fine Aggregate shall conform to Section 202 of the Specifications.

Coarse Aggregate for surface treatment shall conform to Section 203 of the Specifications.

Hydraulic Cement Concrete Class A3 shall conform to Section 217 of the Specifications.

Steel Reinforcement shall conform to Section 223 of the Specifications.

III. PROCEDURES

Pavement restoration shall be according to this Provision and plan notes.

Backfill shall be according to Section 302.03(a)2.g. of the Specifications.

Asphalt Concrete shall be placed and compacted according to Section 315 of the Specifications.

Surface Treatment shall be placed according to the special provision for Asphalt Surface Treatment and the attached drawing.

Concrete Pavement shall be placed according to the special provision for Patching Hydraulic Cement Concrete Pavement and this special provision. Open trench in Hydraulic Cement Concrete Pavement should be located at existing transverse joints if at all possible. If concrete pavement is removed within two feet of an existing transverse joint, pavement removal shall be extended two feet beyond the joint. Reinforcing steel and dowels shall be installed according to Road and Bridge Standard PR-2. Joint replacement shall be according to Road and Bridge Standard PR-2.

IV. MEASUREMENT AND PAYMENT

Restoring Existing Pavement unless otherwise specified will not be measured for separate payment, the cost thereof shall be included in the price bid for the utility to which it pertains according to Section 302.04, Section 520.06 or Section 700.05 of the Specifications, as appropriate. However, widths and depths in excess of the attached drawing that are authorized or directed by the Engineer will be paid for according to Section 109.05 of the Specifications.

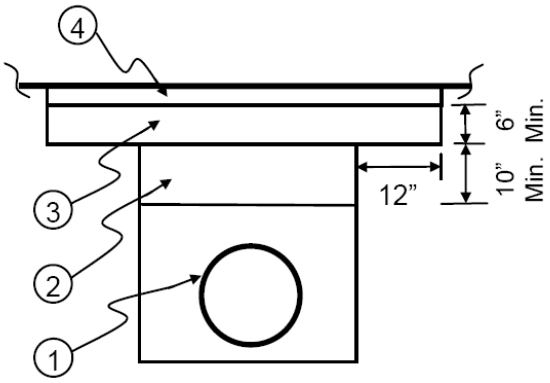

PAVEMENT STRUCTURE
Asphalt Conc. Base and Surface

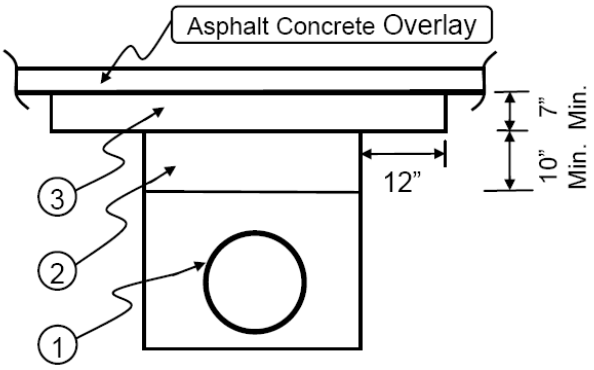

PAVEMENT STRUCTURE
Scheduled for Asphalt Conc. Overlay

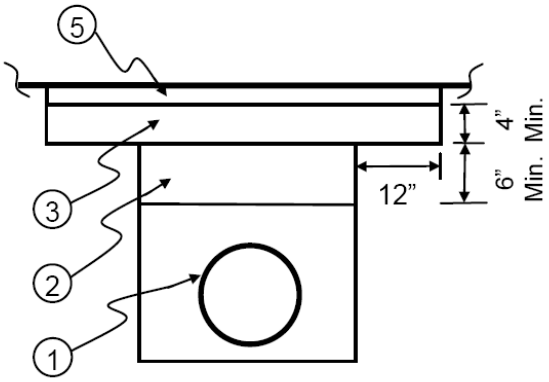

PAVEMENT STRUCTURE
Aggregate Base and Surface Treatment

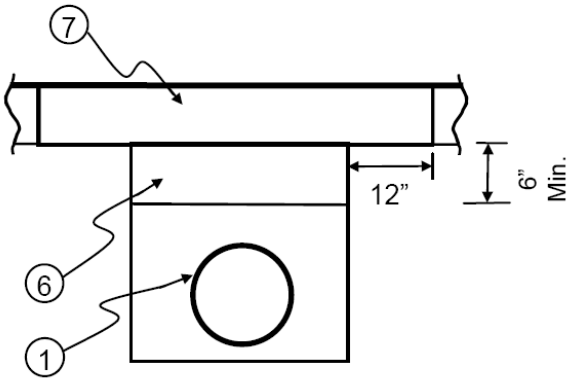

PAVEMENT STRUCTURE
Hydraulic Cement Concrete

NOTES:

The following methods for restoring existing pavement shall be adhered to unless otherwise specified on the plans.

1. Pipe culverts, conduits and utility items shall be installed according to the applicable Road and Bridge Standards and Specifications.

2. Subbase - Aggregate material Type 1, Size 21A or 21B.

3. Asphalt Concrete Type BM-25.0

4. Surface - Asphalt Concrete Type SM-9.5D @ 165 lbs. per sq. yd.

5. Surface - Blotted Seal Coat Type C: The initial seal and final seal shall be CRS-2, CMA-2 or CMS-2h liquid asphalt material @ 0.17 gal./sq. yd. with 15 lbs. of No. 8P stone/sq. yd. each. The blot seal shall be CRS-2, CMS-2 or CMS-2h liquid asphalt material @ 0.15 gal./sq. yd. with 10 lbs. of fine aggregate grade B sand per sq. yd.

6. Subbase - Aggregate material Type 1 Size 21B

7. Surface - Hydraulic Cement Concrete, high early strength, matching existing structure for depth and surface texture.

SP302-000120-00

VIRGINIA DEPARTMENT OF TRANSPORTATION
SPECIAL PROVISION FOR
JACK AND BORE

October 27, 2016

I. DESCRIPTION

The work covered by this section consists of providing all labor, materials, and equipment, and performing all operations required for installing the specified diameters of culvert or utility casing pipe by the jack and bore method in accordance with the requirements of the Contract documents at the locations, alignments and grades shown on the plans. This work shall also include the removal of obstructions, if encountered, in a controlled manner while maintaining face stability and avoiding loss of ground. This special provision supplements Section 302.03(a)1 of the current VDOT Road and Bridge Specifications.

Prior to bidding, the Contractor shall visit and examine the work site and all conditions thereon and take into consideration all such conditions that may affect this work. Subsurface data for the project is available for review at the District Materials Office.

II. QUALIFICATIONS

The Contractor shall be experienced in jack and bore operations and have completed a minimum of five jack and bore projects in similar ground and groundwater conditions with similar cover conditions using similar size, type, and length of pipes to be installed on this project within the last three years.

The Contractor shall furnish to the Engineer a listing of the required information including contact personnel and their current phone numbers. The Contractor shall furnish the name and experience record of the field supervisor who will be in daily responsible charge of the jack and bore operation as well as the operator for each shift. The field supervisor will be present at all times when the work is being progressed. Qualified work crew personnel shall each have a minimum of three years' experience with jack and bore equipment similar to that proposed for this project and in similar ground and cover conditions.

III. SUBMITTALS

The Contractor shall submit five copies of the following material to the Engineer for review and acceptance at least 30 calendar days prior to beginning jack and bore construction:

1. Shop drawings and narratives describing proposed pipe jack and bore means and methods including the following: equipment, equipment layout, procedures, sequence and production schedule. For boring equipment, show design, dimensions, method of operation, and steering control capability.

2. Description of proposed line and grade control methods.

3. Proposed procedures, materials, and equipment for lubricating the exterior of the pipe during jacking.

4. Proposed procedures, materials, and equipment for removing, clearing or otherwise making it possible to advance past obstructions.

5. Proposed procedures, materials, and equipment to fill voids outside of the pipe created or detected during the advance of the pipe.

6. Calculations, prepared and stamped by a Registered Professional Engineer licensed in the Commonwealth of Virginia, that demonstrate the pipe to be jacked has been designed to support the maximum anticipated earth loads and superimposed live loads, including but not limited to jacking loads, that may be imposed on the pipe during and after construction. The Contractor shall determine the additional stresses imposed on the pipe during jacking operations and upgrade the quality and strength of the pipe and pipe joints to the extent necessary to withstand the additional stresses imposed by the jacking operation or change his methodology to account for additional loads and stresses.

7. Blank daily log of jack and bore progress, to be completed within 8 hours of the completion of each shift to document the jack and bore work accomplished, the amount of excavated soil, and the results of ground surface survey monitoring.

8. Description of method to remove and dispose of spoil.

9. Estimate of anticipated jacking loads.

10. Pit dimensions, locations, surface construction, profile, depth, method of excavation, shoring bracing and thrust block design, including drawings and complete calculations.

11. Plan for flood protection and dewatering of pits and tunnel structures during construction.

12. Verification that the pipe complies with applicable contract requirements.

13. Condition survey (photographs and ground survey) of existing surface conditions along the planned pipe alignments. Photographs at 100% coverage. Minimum ground survey at edges of pavement and centerline of each travel direction (along pipe alignment), and at pipe centerline and 10-foot offsets (perpendicular to pipe alignment).

14. A detailed plan for monitoring ground surface movement due to the jack and bore operation. The plan shall address the method and frequency of survey measurement. At a minimum, the plan shall include taking measurements of ground movements of all structures, roadways, and any other areas of concern within at least 25 feet on both sides of all jack and bore pipelines at a maximum spacing of 100 feet along the jack and bore route or as otherwise required by the Engineer. The Contractor shall submit initial survey readings prior to start of jack and bore operations. The plan shall include survey readings of surface monitoring points daily during active boring operations. Subsequent readings shall be performed a minimum of one week, two weeks, and four weeks after completion of jack and bore operations and at project completion.

15. Contingency plans for review and acceptance for the following potential conditions: Damage to the pipeline structural integrity and repair, loss and return to line and grade, and loss of ground.

16. Contingency plan also required for encountering obstructions. Details of proposed means and methods for obstruction removal are required along the alignment with consideration of possible constraints on surface access, including but not limited to the use of recovery shafts. Recovery shafts shall be constructed in accordance with submittals approved by the Engineer.

17. Verification that procedures meet all applicable OSHA requirements. These procedures shall be submitted for record purposes only and will not be subject to approval by the Engineer. As a minimum, the following should be included: Protection against soil instability and ground water inflow; safety for shaft access and exit; protection against mechanical and hydraulic equipment operations and for lifting and hoisting equipment and material; ventilation and lighting; monitoring for hazardous gases; protection against flooding and means for emergency evacuation; protection of shaft; emergency protection equipment; and safety supervisory responsibilities.

18. As-built plans of all jack and bore elements within 30 calendar days of project completion. As-built plans shall include details of the installed pipes, temporary works, permanent structures, backfill materials, post-construction surveys, construction photographs, descriptions of problems encountered, and corrective procedures implemented.

IV. EQUIPMENT AND MATERIALS

1. Pipe shall meet the following minimum requirements:

   A. For culvert installations, the pipe shall be made of reinforced concrete in accordance with ASTM C76. For utility installations, the pipe shall be made of steel (ASTM A139), 0.5 inches minimum wall thickness, shall be round, with a smooth, even outer surface and shall have joints that allow for easy butt-welded connections between pipe sections. Other pipe types may only be used if approved by the Engineer.

   B. Pipe ends shall be square and smooth so that the jacking loads are evenly distributed around the entire pipe joint to minimize point loads when the pipe is jacked.

   C. The pipe shall be capable of withstanding the jacking forces that will be imposed by the process of installation.

   D. The driving ends of the pipe and intermediate joints shall be protected against damage.

   E. The detailed method proposed to cushion and distribute the jacking forces shall be submitted to the Engineer for review and acceptance.

   F. Any pipe showing signs of failure shall be jacked through to the reception shaft, removed and replaced at no additional cost to the Engineer.

   G. The pipe manufacturer's design jacking loads shall not be exceeded during the installation process. The pipe shall be designed to withstand all temporary installation loads.

2. Jacking equipment shall meet the following minimum requirements:

   A. The thrust blocks shall be designed to transfer jacking loads into the soil and support the maximum pressure developed by the main jacking system with a minimum factor of safety of 2.5. The thrust blocks shall be perpendicular to the pipe alignment. Special care shall be taken when setting the pipe guide rails in the jacking pit to ensure correctness of the alignment, grade, and stability. If concrete thrust blocks or a treated soil zone are utilized to transfer jacking loads into the soil, the casing shall not be jacked until the concrete or treated soil have attained the required design strength.

   B. The jacking head shall be suitable to protect the pipe from damage due to the thrust from the jacks, and to transfer that thrust from the jack to the pipe.

C. The jacking frame, upon which the pipe being jacked will rest, shall be of railroad rails or other suitable steel or wooden members set to the correct line and grade to act as guides for true alignment of the pipe.

D. The main jacking equipment installed shall have a jacking capacity that is at least 150% of the maximum calculated allowable jacking load required to install the pipe.

E. The jacking apparatus shall be strongly constructed, and set and maintained in proper relative position and alignment, in order to minimize forces that would tend to bend the pipe, cause it to deflect from true alignment, or displace the reaction blocks.

V. EXECUTION

1. Jacking and Receiving Pits shall meet the following minimum requirements:

   A. The jacking and receiving pits shall be of adequate size to accommodate the boring machine, jacking head, frame, jacks, reaction blocks, added section of pipe, and other material and equipment, and to provide sufficient and safe working space. Pits shall be located as shown on the plans. The Contractor may provide additional pits to better suit the capabilities of the jack and bore equipment only with written approval of the Engineer. Any request for changes in the location or addition of shafts shall be submitted in writing. The cost of additional access shafts constructed for the Contractor's convenience will be considered incidental to the bid price.

   B. The Contractor shall choose the excavation support system used. The Contractor shall be responsible for the design of the system. The design of pits shall ensure safe boring machine exit from the jacking pit and entry into the receiving pit. The Contractor shall furnish and install equipment to keep the jacking pit free of excess water. The Contractor shall also provide surface protection during the period of construction to ensure that surface runoff does not enter the pits.

   C. All pits shall be backfilled in accordance with Section 303 of the Specifications. All shoring materials, bracing, temporary supports, rubbish, and construction materials shall be removed from the job site and disposed of upon completion of jack and bore operations.

2. Pipe installation shall be addressed as follows:

   A. Bracing and backstops shall be so designed and jacks shall be of sufficient rating so that the jacking can progress without stoppage, except for adding lengths of pipe.

   B. The use of water or other liquids to facilitate spoil removal is prohibited.

   C. If voids are created or detected outside the pipe during the advance of the pipe, the Contractor shall fill the voids in accordance with the plan submitted per Section III.5.

   D. If an obstruction is encountered during the advance of the pipe, the Contractor shall remove the obstruction in accordance with the contingency plan submitted per section III.16.

3. Tolerances shall be as follows:

   A. The Contractor shall install the jack and bored pipe to within 2 inches vertically and 6 inches horizontally of the alignment shown on the plans. The installed pipe gradient shall not be less than the gradient shown on the plans.

B. Minimum pipe cover shall be 5 feet or three times the pipe outside diameter, whichever is greater, unless specified otherwise in the contract documents.

C. If the jacked pipe is out of alignment by an amount that requires redesign or reconstruction of the pipe or associated structures, the Contractor shall do so at no additional cost to the Engineer.

D. Contractor shall carry out operations to minimize settlement and heave of the ground and shall be responsible for damage due to settlement or heave from any construction induced activities. In the event of movement of the ground surface, structure or utility in excess of 0.5 inch being detected, or damage being recorded, the Engineer may order that the work be stopped and secured. Before proceeding, the Contractor shall correct any problems causing or resulting from such movement entirely at its own cost. If ground settlement or heave occurs which might affect the accuracy of temporary or permanent benchmarks, it is the Contractor's responsibility to monitor and report such movement to the Engineer.

E. Unless otherwise noted in the Contract Documents, settlement or heave at the ground surface during and after construction shall not exceed 0.5 inch within 25 feet laterally on either side of the centerline of the pipe alignment.

SP302-000140-01

VIRGINIA DEPARTMENT OF TRANSPORTATION
SPECIAL PROVISION FOR
PIPE REHABILITATION

November 7, 2016

I. DESCRIPTION

This work shall consist of the rehabilitation of existing storm water, surface water pipe culverts, and sanitary sewer lines by the method or methods specified at the designated locations described in the Contract in accordance with the requirements of this provision and as directed by the Engineer. All references to the AASHTO LRFD Bridge Design Specifications herein refer to the specific version in use by VDOT Structure and Bridge Division at the time of submittal.

II. MATERIALS - GENERAL REQUIREMENTS

1. **Cement grout** shall conform to Section 218.03(b) or (d) of the Specifications, or be a lightweight cellular foamed concrete of at least 30 pcf unit weight and 100 psi 28-day compressive strength, with foaming agent meeting ASTM C869.

2. **Method A pipe rehabilitation - Corrugated steel pipe** used as pipe liners for Method A pipe rehabilitation shall conform to Section 232.02 of the Specifications and shall be 10 gage with 3-inch by 1-inch angular corrugations. Corrugated steel pipe used as liners shall be manufactured by QC/QA producers on the VDOT Materials Division's Approved Products List.

3. **Method B pipe rehabilitation** - **Flexible pipe liners** used for Method B pipe rehabilitation shall be from the VDOT Materials Division's Approved Products List, List No. 38. Liner systems may be subject to limitations for use as specified herein, by site-specific limitations for those locations listed in the Contract or as shown on the List No. 38 for the specific liner type. Where such is the case, the Contractor shall use only that type or those types that the Department has specified for the specific location listed in the Contract, and which are not limited by restrictions stated in List 38. The Contractor shall furnish the Engineer information, services, or other requirements as detailed in List 38 for all materials used for pipe rehabilitation systems specified in the Contract.

4. **Method C pipe rehabilitation - Smooth-wall steel pipe** used as liners used for Method C pipe rehabilitation shall conform to Section 232.02(c)5 of the Specifications.

III. METHOD B LINER REQUIREMENTS

Method B pipe liners shall be one or more of the following categories as designated in the Contract:

1. **Category A - Cured-In-Place Pipe (CIPP) -** The Contractor shall submit design calculations demonstrating the liner system conforms to the requirements of this Section.

   The liner system shall conform to Drainage Manual, Chapter 8, Section 8.3.6.7 - Table A, "Flexible Liner (Method B) Type Selection Guidelines for Category A systems," and shall follow ASTM F1216 Appendix X1.2.2, "Fully Deteriorated Gravity Pipe Conditions." Design calculations shall provide groundwater table elevation at crown of pipe. Design calculations shall use a HL-93 traffic loading, which may be ignored after 8 feet of cover, except for multiple barrel rehabs, where it shall continue indefinitely. Assume the total wet unit weight of soil is 120 pcf, or 135 pcf when saturated. Use a factor of safety of N = 2.0.

Modulus of soil reaction for design shall be as follows:

Cover (ft)	Modulus[1] (ksi)
0-5	1.8
>5-10	2
>10-30	2.2
>30-60	2.6
>60	2.8

[1]Based on VDOT pipe installation standards

Any voids around exterior of host pipe shall be filled, or the design assumptions will be considered invalid.

The design shall specify the method for installation and curing, individual components, tube type (whether reinforced or non-reinforced), manufacturer name and type of resin including catalyst, and the volume of resin required to achieve proper impregnation and curing. The Contractor shall include lot numbers and expiration dates of all supplied components. The liner system shall have an impermeable inner and outer plastic film or plastic pre-liner to promote complete polymerization, prevent resin migration and loss, and prevent contamination of the interior of the finished product.

The liner system shall conform to the following requirements, verified through testing:

CATEGORY A - CIPP

Property	Test Procedures	Physical Requirement
Tensile strength at yield	ASTM D-638	3,000 psi
Modulus of elasticity	ASTM D-790	200,000 psi
Flexural strength	ASTM D-790	4,000 psi

2. **Category B - Fold and Form flexible liners -** The Contractor shall submit design calculations demonstrating the liner system conforms to the requirements of this Section.

   The liner system shall conform to Drainage Manual, Chapter 8, Section 8.3.6.7 - Table A, “Flexible Liner (Method B) Type Selection Guidelines for Category B systems,” and shall follow ASTM F1947 Appendix X1.2.2, “Fully Deteriorated Design Condition;” or ASTM F1867 Appendix X1.2.3, “Fully Deteriorated Design Condition.” Design calculations shall provide groundwater table elevation at crown of pipe. Design calculations shall use a HL-93 traffic loading, which may be ignored after 8 feet of cover, except for multiple barrel rehabs, where it shall continue indefinitely. Assume the total wet unit weight of soil is 120 pcf, or 135 pcf when saturated. Use a factor of safety of N = 2.0.

   Modulus of soil reaction for design shall be as follows:

Cover (ft)	Modulus[1] (ksi)
0-5	1.8
>5-10	2
>10-30	2.2
>30-60	2.6
>60	2.8

[1]Based on VDOT pipe installation standards

   Any voids around exterior of host pipe shall be filled, or design assumptions will be considered invalid.

3. **Category C – High Density Polyethylene (HDPE), Polyvinylchloride (PVC) or Polypropropylene (PP) Slip Liners** – The Contractor shall submit design calculations demonstrating the liner system conforms to the requirements of this Section.

The liner system shall conform to Drainage Manual, Chapter 8, Section 8.3.6.7 - Table A, “Flexible Liner (Method B) Type Selection Guidelines for Category C systems,” and shall follow AASHTO LRFD Bridge Design Specifications, Section 12 . Spirally wound liners shall meet ASTM F1697 and F1741. The Contractor shall provide Standard Dimension Ratio (SDR) and outside diameter of pipe, for solid wall pipe; and outside diameter, inside diameter, diameter to centroid of wall, moment of inertia, and gross and effective areas of wall, for corrugated or profile wall pipe. Design calculations shall provide groundwater elevation at crown of pipe. Design calculations shall use a HL-93 traffic loading, which may be ignored after 8 feet of cover, except for multiple barrel rehabs where it shall continue indefinitely. Assume the total wet unit weight of soil is 120 pcf, or 135 pcf when saturated.

Constrained soil modulus for design shall be as follows:

Cover (ft)	Modulus* (ksi)
0-5	1.8
>5-10	2
>10-30	2.2
>30-60	2.6
>60	2.8

*Based on VDOT pipe installation standards

Long term modulus shall be used for stiffness computation. The following factors shall be used in the design calculations:

Factor	Value
Shape	3.0
Live Load Distribution	1
Deflection Lag	1.5
Bedding	0.1
Installation	1.5
Poisson’s ratio of soil	0.3
Earth load modifier	1.05
Live load modifier	1.0
Manning’s number for open channel	
Smooth interior PVC	0.011
Smooth interior HDPE and PP	0.012

Maximum deflection, deflection needed in any computations, and service long-term tension strain limit shall be 5 percent for PE, and either 5 percent or 3.5 percent for PVC depending on cell class as per AASHTO LRFD Bridge Design Specifications, Table 12.12.3.3.1, and 3.5 percent for PP.

Any voids around exterior of host pipe shall be filled, and the annular space between host pipe and liner pipe shall be fully grouted, or the design assumptions will be considered invalid.

4. **Category D - Spray-On liners** - The Contractor shall submit design calculations demonstrating the liner system conforms to the requirements of this Section.

The liner system shall conform to Drainage Manual, Chapter 8, Section 8.3.6.7 - Table A, "Flexible Liner (Method B) Type Selection Guidelines for Category D systems." Because of the variety of spray-on liners available, several design options may be used. Design options, as described herein, are based on AASHTO LRFD Bridge Design Specifications, Section 12. For cementitous liners, design shall follow that for concrete pipe using D-load test data from manufacturer. For other liners (i.e., polyurea, epoxy, etc.), design shall be guided similarly to fiberglass pipe (high modulus material) or simply as plastic pipe if flexural modulus or ring bending strain results are not satisfactory.

A. **Cementitious liner shall be treated similarly as fiberglass pipe (this method is based on the AASHTO LRFD Bridge Design Specifications, Section 12, for fiberglass pipe).**

The flexibility factor for fiberglass pipe shall be determined in accordance with AASHTO LRFD Bridge Design Specifications, Article 12.12.3.6, but with the modulus replaced by flexural modulus, and the flexibility factor shall be limited as specified in Article 12.5.6.3 therein. Follow AASHTO LRFD Bridge Design Specifications Section 12.12.2.2 for deflection, except replace modulus with flexural modulus (ksi) and drop the "$e_{sc}D$" term.

Factored long term strain due to flexure shall be less than or equal to $0.9*S_b$ (S_b is ring bending strain). Factored buckling strain demand shall be less than or equal to 0.7*nominal strain capacity for buckling demand, computed per Eqn. 12.12.3.10.1e-2, except replace modulus with flexural modulus and soil resistance factor shall be 1.0. Factored buckling strain shall be:

$$\varepsilon_{bck} = \frac{(13.65 \times H_c + 1.75 \times P_L)r}{M_f \times A}$$

Where:

H_c = Height of Cover in feet
r = radius of liner to centroid in inches
M_f = Flexural modulus (ksi)
A = Cross sectional area of liner (in^2/in)
P_L = Live load (psi) determined from Article 12.6.1 of the AASHTO LRFD Bridge Design Specifications

Flexural modulus shall be determined from pipe stiffness tests and per Appendix 2 of ASTM D2412, and shall be at least 1,200 ksi. Long term ring bending strain, S_b, shall be determined in accordance with ASTM D5365 and results extrapolated to both 50 years and 75 years, and shall be at least 0.006.

It is recognized that for a spray-on product, obtaining specimens for *flexural modulus and ring bending strain tests would require special formwork at a fabrication facility. Similarly, as is done for watertight joint testing*, these tests may be done and witnessed by a PE and a report submitted, which may then be used as proof of results without having to perform the tests for each future project, as long as materials and processes have not changed. Application thicknesses not tested may be interpolated by a method satisfactory to the Department. Extrapolation beyond thicknesses tested will not be permitted on the thin side, and will only be permitted for thicker applications by satisfactory statistical data.

Design calculations shall provide groundwater table elevation at crown of pipe. Design calculations shall use a HL-93 traffic loading, which may be ignored after 8 feet of cover, except for multiple barrel rehabs, where it shall continue indefinitely. Assume the total wet weight of soil is 120 pcf, or 135 pcf when saturated. Use a factor of safety of N = 2.0.

Modulus of soil reaction for design shall be as follows:

Cover (ft)	Modulus* (ksi)
0-5	1.8
>5-10	2
>10-30	2.2
>30-60	2.6
>60	2.8

*Based on VDOT pipe installation standards

The following factors shall be used in the design calculations:

Factor	Value
Shape	3.0
Live Load Distribution	1
Deflection Lag	1.5
Bedding	0.1
Installation	1.5
Poisson's ratio of soil	0.3
Earth load modifier	1.05
Live load modifier	1.0

Maximum deflection and deflections needed in any computations shall be 5 percent.

Any voids around exterior of host pipe shall be filled, or design assumptions will be considered invalid.

B. **Other liner types treated similarly as fiberglass pipe**

Any other liner types being treated similarly as fiberglass pipe shall follow the same requirements as for cementitous liner treated similarly as fiberglass pipe, outlined in Paragraph A, herein.

C. **Other liner types treated same as plastic (HDPE, PVC, or PP) pipe**

Any other liner types being treated similarly as plastic pipe shall follow AASHTO LRFD Bridge Design Specifications, Section 12, for thermoplastic pipe, and the requirements of Paragraph 3 herein.

IV. GENERAL PROCEDURES

The Contractor shall submit site specific working drawings (and supporting calculations) to the Engineer for the rehabilitation method selected by the Contractor from the allowable methods cited for each location listed in the Contract at least 1 week prior to the start of pipe rehabilitation operations. Working drawings shall be prepared and submitted according to the requirements herein and Section 105.10 of the Specifications.

The Contractor shall also furnish to the Engineer a certification of suitability for the proposed rehabilitation system to provide the necessary hydraulic capacity and structural strength required to support the anticipated total load and hydrology at the site of rehabilitation. This certificate of suitability shall be determined from an analysis that has been signed and sealed by a Professional Engineer holding a valid license to practice engineering in the Commonwealth of Virginia. Such certification shall cover all design data and supporting calculations for the planned rehabilitation methodology and materials. In addition to the Professional Engineer's certification of the structural strength to support the anticipated total load, a load rating shall be submitted. The load rating calculations shall be in accordance with VDOT Structure and Bridge Division requirements.

All work and equipment shall be contained within the existing right-of-way. In the event the Contractor deems a temporary construction easement necessary due to the selected method or product chosen by the Contractor, the Contractor shall obtain such additional easement for the Contractor's convenience at no additional cost to the Department.

The Contractor shall maintain all lanes of traffic at all times in accordance with the Contract unless otherwise directed by the Engineer. This maintenance of traffic shall include temporary detours if required by the Contractor's method of operations to facilitate construction where permitted by the locality and the Department. When temporary detours are required, the Contractor shall design and construct temporary detours in accordance with Section 105.14 and Section 512 of the Specifications, and Standard GS-10 of the Standard Drawings.

The Contractor shall notify the Engineer at least 48 hours prior to the initiation of rehabilitation operations at each location.

In the event the selected method of rehabilitation requires disturbing existing surfaces or disturbs existing surfaces, these surfaces shall be restored in kind to their original pre-construction conditions after rehabilitation operations have been completed. The cost thereof shall be included in the price bid for Pipe Rehabilitation for the specified location.

The Contractor shall obtain all required OSHA confined space entry permits where these are required by the Contractor's operations and the scope of work in the Contract. The Contractor shall schedule and arrange the work so as not to be delayed by the acquisition of the proper permits.

The Department has performed an inspection of the existing pipes in each location listed in the Contract to determine the extent and nature of each pipe's deterioration or damage so as to designate the allowable methods of rehabilitation for the pipe at that specific site. Using the information collected from this inspection, the Department has determined, through its engineering analysis, the best practical methods of rehabilitation for each respective site (location) taking into account site specific conditions such as installation working space for the various types of liners, hydraulic capacity before and after rehabilitation, height of cover, soil density, and loading conditions, among other criteria. The Contractor shall determine how he plans to perform the work from the allowable methods and categories for each specified location or site indicated in the Contract. Regardless of the final method selected, the Contractor shall provide the Engineer documentation of the Contractor's proposed procedures, materials, equipment, incidentals, and resources the Contractor plans to use to ensure successful rehabilitation of the existing pipes to assist the Engineer in monitoring the Contractor's operations. The Contractor will not be permitted to substitute a different method or category, if designated, than that or those specified for the location described in the Contract.

The Contractor shall clear the existing pipe of any debris, protrusions higher than 1/2 inch, and any other potential obstructions prior to the start of rehabilitation efforts. The Contractor shall then thoroughly clean and prepare the host pipe prior to the liner installation. Cleaning shall conform to the recommendations or instructions of the liner manufacturer, producer, or supplier of the methodology planned for use. In the absence of such recommendations, the Contractor shall submit his proposed method for cleaning and preparing the host pipe for the Engineer's review and acceptance. A copy of the proposed cleaning methodology and materials shall be provided to the Engineer at least two working days prior to beginning the work at that location.

Contractor Pre-Installation Inspection – The Contractor shall perform a pre-installation visual or video inspection at the designated location of each pipe shown in the Contract not later than 1 week after cleaning the host pipe at that location. This visual or video inspection shall be conducted in accordance with the requirements of this specification and VTM 123 to verify pre-rehabilitation conditions. The inspection shall be performed in the presence of the Engineer. Video inspections shall be clearly labeled on the recording media with the actual time, date, and location of the pipe inspected. A copy of the video inspection shall be furnished to the Engineer prior to the start of rehabilitative construction. The cost of pre-Installation Inspection will be considered incidental to the cost of the rehabilitation. In the event the Contractor's inspection shows the method of rehabilitation the Contractor had selected from the allowable methods is no longer viable at that location (as verified by the Engineer), the Contractor shall select another allowable method, if specified, from those designated in the Contract. If no other method is designated, or if other methods of rehabilitation are also now deemed impracticable at that location, further work will be determined in accordance with Section 104.03 of the Specifications.

V. PROCEDURES FOR APPROVED METHODS

The following methods of pipe rehabilitation are approved by the Department; however, not all methods may be appropriate for each individual location shown in the Contract. The Contractor shall consult the Contract to determine the methods (and categories if designated) that are permitted per the designated location. Individual methods shall conform to the criteria specified.

1. PIPE LINER METHODS

A. **Method A - Corrugated steel pipe liner** shall be rehabilitation by insertion of a rigid corrugated steel pipe liner through an existing host pipe (36" diameter or larger corrugated or concrete pipe). Where required, pipe shall be joined by the use of coupling bands of an internal expansion type that shall provide a leak-proof joint after grouting.

Expansion devices shall be installed above the mid-point of the pipe. After the Engineer approves installation and alignment of the liner within the host pipe, the Contractor shall fully grout the annular space between the existing pipe and the liner with cement grout meeting Section II-1 herein. Prior to grouting, the annular space shall be adequately sealed at each end. Plug holes required for injection of grout shall be satisfactorily plugged and sealed following the grouting operation.

B. **Method B - Flexible pipe liner** shall be rehabilitation by the insertion of a flexible pipe liner into a host pipe. Method B rehabilitation, as indicated in the Contract, shall be accomplished by the use of the following categories of liner:

- Category A – Cured-In-Place Pipe (CIPP)
- Category B – Fold and Form flexible liners

- Category C – High Density Polyethylene (HDPE), Polyvinyl chloride (PVC), or polypropylene PP slip liners

- Category D – Spray-On liners

Installation and curing requirements of pipe sections for the various flexible pipe liners shall be according to the manufacturer instructions for the specific product as applicable. Joints shall meet the requirements of Section 30 of the AASHTO Bridge Construction Specifications and leak resistance as defined in AASHTO PP 63-09.

The Contractor shall furnish all information for the liner system the Contractor proposes to use to include, as applicable, individual components of the system, tube type (whether reinforced or non-reinforced), manufacturer name, type of resin including catalyst and proprietary chemicals, and the volume of resin required to achieve proper impregnation and curing, and installation instructions. All components of the system, including lot number and expiration date, shall be as recommended by the manufacturer for the specific system proposed for use. The Contractor shall submit such documentation and instructions from the manufacturer to the Engineer at least 3 working days prior to the start of installation to verify compliance with the requirements of this paragraph. The various categories of flexible liners shall conform to the following:

(1) **Method B, Category A – Cured-In-Place Pipe (CIPP) liner method**. The Cured-In-Place Pipe liner system shall be designed, fabricated, and installed in such a manner as to result in a maintained, full contact, tight mechanical fit to the internal circumference of the host pipe for its entire length. The installation shall adhere to the cure times and temperatures stipulated in the manufacturer's recommended installation and cure specifications. The finished product shall be free of de-lamination, bubbling, rippling, or other signs of installation failure.

Pulled-in-place liner installation must be accomplished without significant liner twisting or stretching during installation. At no time shall the pulling force for liner installation exceed that established by the liner manufacturer.

All Cured-In-Place Pipe installations shall be performed in the dry. The Contractor shall consider the cost to accommodate this requirement as incidental to the cost of the installation.

Curing for styrene-based, epoxy-based,, and vinyl ester-based CIPP may be accomplished by water, steam, or ultraviolet light and shall be according to the liner manufacturer's instructions.

The Contractor shall submit preconstruction installation and cure specifications (to include site specific cure time and temperature calculations) and design calculations (stamped by a licensed Professional Engineer) to the Engineer a minimum of 3 working days prior to the proposed start of the liner installation.

The Contractor shall place an impermeable sheet or other impermeable device immediately upstream and downstream of the host pipe prior to liner insertion to capture any possible raw resin spillage during installation. During and after installation the Contractor shall promptly remove and properly dispose of any waste materials. Where the pulled-in-place method of installation is used, the Contractor shall install a semi-rigid plastic slip sheet over any interior portions of the host pipe that could tear the outer film and any significant voids in the host pipe. The Contractor shall ensure there is no loss of impermeability of the inner and outer plastic films or pre-liner during installation. The Contractor shall promptly repair any pinholes or tears in the plastic films or pre-liner before proceeding with the installation. Where such damaged areas cannot be repaired, the Contractor shall promptly replace the impermeable plastic films or pre-liner before proceeding with the installation.

The Contractor shall not perform work without oversight of the Engineer or Inspector for the duration of the installation.

The Contractor shall monitor temperature via a minimum of three thermocouples on the outer surface of the liner (one each at the upstream and downstream ends and one approximately mid-length of the host pipe) and automatically log cure time-temperature data with a print-out from the data logger and provide such information to the Engineer.

The Contractor shall obtain and comply with all discharge-related permits, including air, water, and wastewater treatment (i.e. Publicly Owned Treatment Works). For any discharge to a Publicly Owned Treatment Works (POTW), the Contractor shall obtain advanced written approval from the receiving facility for acceptance of effluent waste before repair work can start and shall provide such documentation of the POTW discharge approval to the Engineer prior to the start of the installation.

The Contractor shall capture and properly dispose of all cure water or steam condensate and be responsible for the proper transportation and off-site disposal of process residuals. The Contractor shall provide disposal documentation from the receiving facility to the Engineer. The Contractor shall comply with all the requirements of the POTW receiving the discharge.

The Contractor shall thoroughly rinse the cured lined pipe with clean water and capture and properly dispose of rinse water prior to re-introducing flow.

For styrene-based CIPP and vinyl ester-based CIPP, the Contractor shall employ the services of a qualified independent environmental services laboratory or environmental consultant to collect the samples specified below. The Contractor shall submit a completed Form C-9A to the recipients specified on the form within 4 weeks after completion of rehabilitation.

Water samples shall be collected within 3 feet of the pipe ends both before rehabilitation, and within one week after the pipe liner has cured in accordance with applicable monitoring requirements listed in 40 CFR Part 136. If samples cannot be collected from within 3 feet of the pipe ends, the Contractor shall collect them from as close to the pipe ends as possible. If water is not available to sample, samples of rinse water shall be used for the analyses. For all CIPP liners, water samples shall be analyzed for total organic carbon using EPA 9060a, chemical oxygen demand using EPA 410.3, temperature, and pH. Temperature and pH shall be determined on site using applicable methods listed in 40 CFR Part 136. For styrene-based liners, water samples shall also be analyzed for styrene using USEPA SW 846 Method 8260. Styrene concentrations in water samples shall not exceed 2.5 mg/L. For vinyl ester-based liners, samples shall also be analyzed for diallyl phthalate, which shall not exceed 0.4 mg/L. The Contractor shall submit a completed Form C-9A to the recipients specified on the form within 4 weeks after completion of the rehabilitation. Form C-9A is available from the VDOT website.

It shall be the Contractor's responsibility to report and take appropriate corrective actions to contain and remediate any release of contaminants from cured-in-place process materials, effluent or condensate into the environment in accordance with applicable local, state or federal regulations and the Contract. The cost for such remediation shall be at the Contractor's expense.

(2) **Method B, Category B - Fold and form flexible liners** shall be installed in accordance with the requirements of ASTM F1216, ASTM F2019, ASTM F1743, or ASTM D5813 (as applicable) or as recommended by the liner manufacturer.

(3) **Method B, Category C - High Density Polyethylene (HDPE), Polyvinyl chloride (PVC), or polypropylene (PP)** slip liners shall be installed in accordance with the requirements of AASHTO M326 or in accordance with ASTM F1698 as applicable, or as recommended by the liner manufacturer. Cement grout used for filling the annular space shall meet Section II-1 herein.

(4) **Method B, Category D - Spray-On cementitious and polyurea liners** shall be installed in accordance with the liner material manufacturer's instructions, and the Contract.

The Contractor shall perform all installations in the dry. The Contractor shall thoroughly rinse the lined pipe with clean water and capture and properly dispose of rinse water prior to re-introducing flow. The Contractor shall install a temporary curtain at the outlet and inlet to prevent overspray during installation. The Contractor shall reinstate water flow no sooner than 24 hours following installation.

(a) **For cementitious spray-on liners**, the Contractor shall prevent the escape of any rinse water from the lined pipe or otherwise capture it until the Contractor can either: pump it to a container for proper transportation and off-site disposal; or continuously monitor the pH of the rinse water until the pH is less than 9, whereupon the Contractor may release it.

(b) **For polyurea spray-on liners**, the Contractor shall employ the services of a qualified independent environmental services laboratory or environmental consultant to collect the samples specified below.

Water samples shall be collected within 3 feet of the pipe ends both before rehabilitation, and within one week after the pipe liner has cured in accordance with applicable monitoring requirements listed in 40 CFR Part 136. If samples cannot be collected from with 3 feet of the pipe ends, they shall be collected from as close to the pipe ends as possible. If water is not available to sample, samples of rinse water shall be used for the analyses. Samples shall be analyzed for total methylene diphenyl diisocyanate (MDI), methylenedianiline (MDA), and total cyanide. Concentrations of MDI and MDA in water samples shall not exceed 1,000 mg/L and 39 mg/L respectively. Water characterization for chemical oxygen demand (COD) using EPA 410.3 and total nitrogen (TN) concentrations using EPA 351.2 shall also be conducted. The Contractor shall submit a completed Form C-9A to the recipients specified on the form within 4 weeks after completion of rehabilitation. Form C-9A is available from the VDOT website.

It shall be the Contractor's responsibility to report and take appropriate corrective actions to remediate any water quality alteration resulting from the lining materials in accordance with applicable local, state or federal regulations. The cost for such remediation shall be at the Contractor's expense.

C. **Method C – Smooth wall steel pipe liner** shall be rehabilitation by the insertion of a smooth wall steel pipe into the existing host pipe. Where required, liner pipe shall be joined by butt welds in accordance with AWWA C-206.

The Contractor shall fully grout the annular space between the existing host pipe and the steel liner with cement grout meeting Section II-1 herein. The annular space between the existing pipe and the smooth wall steel liner shall not exceed 3 inches at any given point, unless otherwise approved by the Engineer. Prior to grouting, the annular space shall be sealed at each end of the host pipe. Holes required to facilitate injecting grout shall be plugged and sealed following grouting operations. In order to ensure stability during placement, the wall thickness of the liner shall not be less than 1/2 inch.

2. **POST INSTALLATION INSPECTION OF FLEXIBLE LINERS** – The Contractor shall perform a post-installation inspection on all flexible liners installations in accordance with Section 302.03(d) of the Specifications and Virginia Test Method (VTM) 123. To be acceptable, the finished liner shall be continuously intact, fit snug tight against the host pipe over its entire length, and be free from visual defects such as foreign inclusions, dry spots, pinholes, and delamination.

In the event a post inspection of the installation reveals a tight fit of the liner was not achieved in localized areas of the host pipe (comprising less than 20 percent of the pipe length), the annular space between the liner and the host pipe shall be filled with a resin mixture or a non-shrink cementitious grout as specified by the manufacturer that is compatible with the liner system at no cost to the Department.

Where a tight mechanical fit was not achieved on more than 20 percent of the host pipe's length, the annular space shall be filled as designated herein; however, the Contractor will not be allowed to continue with his methodology of installation or the liner system used until the Contractor can demonstrate to the Engineer that the Contractor's choice of liner system, installation methods or operations have been remedied to the extent that they can consistently result in a continuous snug tight mechanical fit between the installed liner and the host pipe for the full length of the host pipe. All such remedial efforts shall be at the Contractor's expense. Further failure to perform a proper installation may result in the disallowance of the use of that liner system and an adjustment in the cost or non-payment of the failed installations depending on the severity of the failure. Adjustment or nonpayment of the installation will be at the sole discretion of the Engineer.

In the event the post installation inspection is not conducted until all or most of the locations in the Contract permitting this methodology have been performed, and the inspection reveals a tight fit between host pipe and liner has not been achieved on 25 percent or more of the host pipe's length or the finished liner is not free from visual defects such as foreign inclusions, dry spots, pinholes, and delamination, then an adjustment in the cost or non-payment of the failed installations maybe made by the Engineer depending on the severity of the failure.

The cost of the post installation inspection will be considered incidental to the cost of the liner installation.

VI. MEASUREMENT AND PAYMENT

Pipe rehabilitation will be measured and paid for in linear feet of pipe for the size, method, and category (if specified) as detailed in the Contract. At locations shown in the Contract where multiple methods are permitted, the Contractor may select from any of the methods specified (subject to the limitations described herein) however, if only one method is specified, this will be the only method permitted by the Department at that location. This price shall include pre installation visual or video inspection; cleaning and preparation of the host pipe; furnishing and installing the liner including coupling and expansion devices; cement grout; design and shop drawing preparation; furnishing and installing liner and all components of the liner system; capturing any discharges or releases during installation or curing operations; obtaining any local POWT, local, state, or federal permits required to perform the work; furnishing any documentation or fees required for effluent or condensate disposal; all testing and sampling including furnishing reports and post installation visual or video inspections for flexible liners; and waste disposal costs.

Prices for pipe rehabilitation shall also include clearing debris and obstructions; excavating when not designated as a separate pay item attributable to this specific work; sheeting; shoring; dewatering; disposing of surplus and unsuitable material; providing backfill material and backfilling; compaction, and restoring existing surfaces.

Payment will be made under:

Pay Item	Pay Unit
Pipe Rehabilitation (Size, Method, Category)	Linear Foot

SP305-000100-01

VIRGINIA DEPARTMENT OF TRANSPORTATION
SPECIAL PROVISION FOR
SHOULDER RENOVATION

October 3, 2016

I. DESCRIPTION

This work shall consist of renovating existing low (erosion or overlay) and high shoulders (debris buildup) and shoulders disturbed due to plant mix overlay or guardrail work as specified in the Contract Documents to provide finished shoulder designs and guardrail heights that conform to the Specifications, Standard Drawings, and Plans. For the purposes of this provision, machining shoulders and manual shoulder restoration shall be viewed as placing, grading, and compacting operations of approved shoulder materials performed by mechanized equipment or manually. Materials allowed for renovating shoulders shall include furnishing and delivery of these materials to the jobsite or to the location(s) designated in the Contract Documents.

II. MATERIALS

Shoulder material shall be either virgin aggregate base material (type and size as specified) or Shoulder Maintenance Material (SMM). SMM shall be: Aggregate Material; Crusher Run Aggregate; Aggregate Subbase or Base; Select Material; recycled materials including Reclaimed Asphalt Pavement (RAP) or Crushed Hydraulic *Cement* Concrete (CHCC); or combinations thereof, conforming to the followings grading when tested in accordance with VTM-25:

% by Weight of Material Passing Sieve		
1-1/2 in	**1 in**	**No. 4**
100	80-100	20-60

Shoulder Maintenance Material, if used, shall be 1-1/2 inch maximum size as determined visually, using VTM-25, or by field measurement. Shoulder Maintenance Material shall have a loose, unconsolidated consistency and shall not contain any clusters of materials that exceed the 1-1/2-inch grading requirement. Material out of conformance with the maximum size limitation will be rejected. However, a sample of material shall be tested for gradation using VTM-25; test results within the last year may be used for stockpile material.

Shoulder Maintenance Material, when comprised of blended aggregate, RAP, or CHCC, shall be thoroughly mixed (manipulated) and shall have a dappled appearance when placed, graded, and compacted.

The use of Shoulder Maintenance Material is subject to the limitations as described herein and elsewhere in the Special Provision Copied Note for Alternate Category Bid Items and Award of Contract included in the Contract.

III. PROCEDURES

The use of more than one type of approved material on uninterrupted runs of shoulder work will not be permitted.

The use of CHCC or any CHCC blended material as SMM will only be permitted in areas 3 feet in width or less and no more than 3 inches in compacted depth once placed.

Shoulder material shall be spread, graded, and compacted according to Section 305.03(e) of the Specifications, except as noted herein. Subgrade shaping will generally not be required unless directed by the Engineer. However, when shaping of the subgrade is required, the cost of such work shall be included in the cost of machining shoulders or manual shoulder renovation work.

The maximum compacted lift thickness of shoulder material (except CHCC or CHCC blends) shall be 6 inches. The acceptability of furnished and finished (compacted) shoulder material will be determined by visual inspection, field measurement, or a combination thereof, at the discretion of the Engineer.

Final pavement surface edge or final paved or stabilized shoulder surface edge shall include existing pavement not designated for overlay and completely compacted pavement overlays, and their corresponding shoulders.

The Contractor shall promptly remove and dispose of surplus shoulder material encountered as a result of shoulder renovation work as well as any shoulder material spilled, left or tracked on the pavement.

Grading for shoulder renovation shall be performed by the following methods:

A. Machining shoulders shall be performed in areas where there is no existing guardrail and none is scheduled to be placed or updated under this contract, in areas with existing guardrail where that guardrail will not be disturbed, in areas scheduled for new guardrail installation before new guardrail is installed, or in areas where existing guardrail will be removed in preparation for guardrail improvement or guardrail replacement. In each of these grading situations it is to be assumed grading can be performed by mechanized equipment unencumbered by existing or newly installed guardrail.

Machining shoulders shall include grading shoulders to appropriate slope and grade where sufficient material is present to renovate the existing shoulders, grading existing shoulders to fill in low areas <u>after</u> shoulder material has been placed, or grading down areas where high shoulders exist due to debris buildup.

Machining shoulders shall result in a uniformly finished slope to the shoulder break that conforms to the Standard Drawings and the included sketch after compaction. Renovated shoulders shall smoothly tie the graded shoulder edge elevation to the adjoining elevation of the final pavement surface edge and final paved or stabilized shoulder surface edge.

B. Manual shoulder restoration shall be used to renovate shoulders in areas where existing guardrail will be undisturbed by adjacent plant mix or other operations specified in the contract.

Manual shoulder restoration shall include grading shoulders around existing guardrail by hand or other intensive production methods to appropriate slope and grade where sufficient material is present to restore the existing shoulders, grading existing shoulders to fill in low areas after shoulder material has been placed, or grading down areas where high shoulders exists due to debris buildup.

Manual shoulder restoration shall result in a uniformly finished slope to the shoulder break that conforms to the Standard Drawings and the included sketch after compaction. Restored shoulder work shall smoothly tie the graded shoulder edge elevation to the adjoining elevation of the final pavement surface edge and final paved or stabilized shoulder surface edge.

Note: Shoulder material specified in this Special Provision is the only allowable material for manual shoulder restoration work unless otherwise approved by the Engineer.

Shoulder material (depending on the type of shoulder renovation operation specified in the Contract Documents or directed by the Engineer) shall be furnished and placed by the Contractor in low shoulder areas, then machined or manually graded off as necessary, and then compacted to provide a finished cross slope that conforms to the applicable Standard Drawings as well as the existing road profile grade.

Where guardrail is to be installed or reinstalled, the placement widths and limits of shoulder material shall be according to the detail requirements for the specific type of guardrail as designated in the Contract Documents and as shown in the Standard Drawings, the attached sketch, or as otherwise indicated in the Contract Documents. Guardrail height shall conform to the Standard Drawings for the applicable guardrail type once work is completed. This work shall proceed as directed by the Engineer.

IV. MEASUREMENT AND PAYMENT

Machining shoulders will be measured in linear feet along the adjacent edge of pavement and will be paid for at the Contract unit price per linear foot. The price shall include placing, grading, and compaction. This price shall also include removing and disposing of surplus, spilled, and tracked material resulting from the Contractor's operations.

Manual shoulder restoration will be measured in linear feet along the adjacent edge of pavement specified in the Contract or directed by the Engineer, and will be paid for at the Contract unit price per linear foot. The price shall include placing, grading, and compaction. This price shall also include removing and disposing of surplus, spilled, and tracked material resulting from the Contractor's operations.

Virgin aggregate base material will be measured in tons and will be paid for at the Contract unit price per ton. The price bid shall include furnishing and delivery.

Shoulder Maintenance Material, if requested and authorized for use, will be measured in tons or square yards and will be paid for at the Contract unit price per ton as bid in Section 0002 of the Special Provision Copied Note for Alternate Category Bid Items and Award of Contract. The price bid shall include furnishing and delivery.

Tonnage for Shoulder Maintenance Material will be based on certified weigh tickets from the source of supply, or when supplied directly from the field, will be computed on the basis of 110 pounds per inch of depth per square yard, converted to tons.

Payment will be made under:

Pay Item	Pay Unit
Virgin Aggregate Base Material, Type ( ), No. ( )	Ton
Machining Shoulders	Linear Foot
Manual Shoulder Restoration	Linear Foot
Shoulder Maintenance Material	Ton

SHOULDER RENOVATION

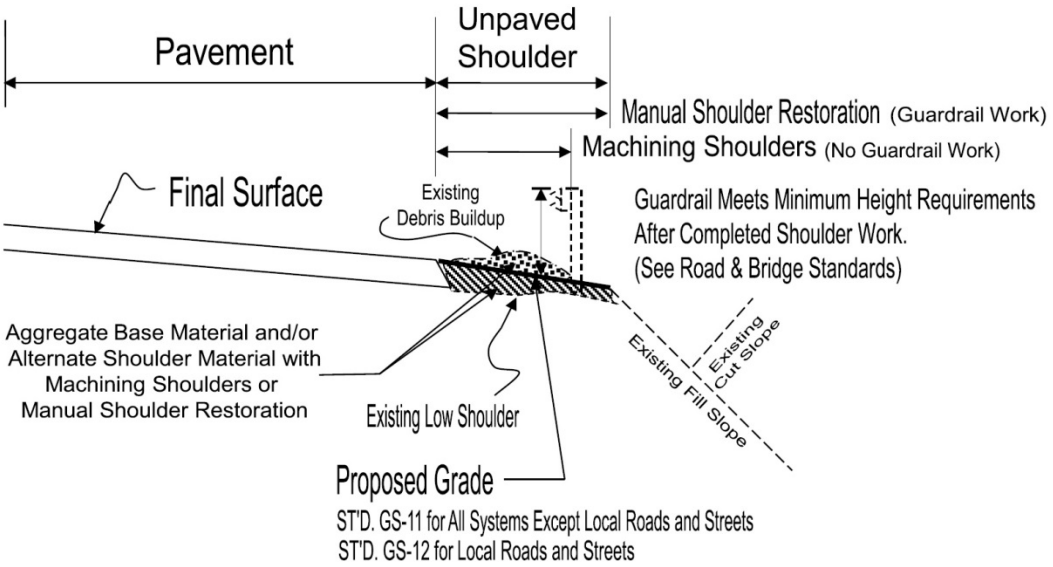

Typical Section for Unpaved Shoulder

Not to Scale

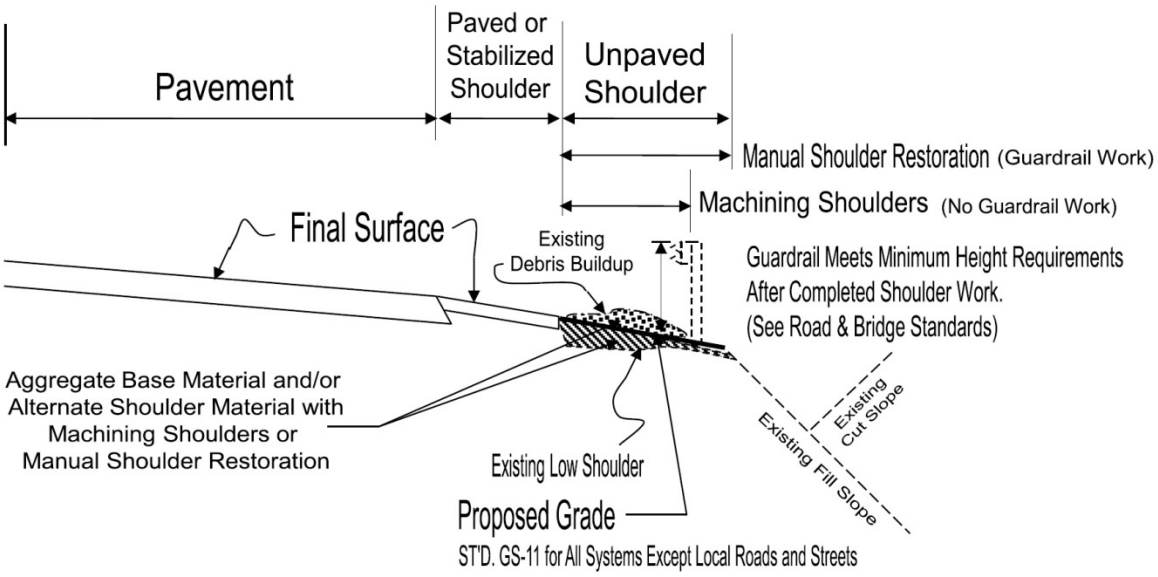

Typical Section for Paved or Stabilized Shoulder

Not to Scale

SP505-000100-00

VIRGINIA DEPARTMENT OF TRANSPORTATION
SPECIAL PROVISION FOR
REPLACEMENT OF GUARDRAIL, MEDIAN BARRIER, IMPACT ATTENUATOR, AND GUARDRAIL TO BRIDGE ATTACHMENTS

August 4, 2016

I. DESCRIPTION

This work shall consist of repairing or replacing damaged guardrail, median barrier, impact attenuators and bridge/guardrail attachments, in accordance with this provision, the plans and as directed by the Engineer.

II. MATERIALS

Guardrail and guardrail components shall conform to Section 505 of the Specifications.

Impact attenuator repair shall use replacement parts from the original manufacturing company.

Sign Panels shall conform to Section 701 of the Specifications.

Guardrail Delineators shall conform to Section 702 of the Specifications.

III. PROCEDURES

The Engineer will preapprove all locations requiring the drilling of holes in bridge railings or fixed objects. The Contractor shall repair any spalling due to the drilling operations in concrete fixed objects or concrete bridge railings and existing holes in concrete shall be patched with materials conforming to Section 218 of the Specifications.

The Contractor shall perform work in accordance with Section 505 of the Specifications, the *Road and Bridge Standards* and the standard drawings for "Recommended Method for Attaching Guardrail to Bridge Rails" (BR-GR). The Contractor may need to modify the method of attachment due to field conditions with the approval of the Engineer.

The Contractor shall reconstruct impact attenuators in accordance with the manufacturers' recommendations.

Pay items with the designation "Install" are materials furnished by the Department for the Contractors use in repair of guardrail installations in accordance with Sections 505 and 510 of the Specifications and as directed by the Engineer. The Engineer will indicate per site the quantity and materials to be installed and the location of the materials for the Contractors use. The Contractor shall make arrangements with the Area Headquarters 48 hours prior to picking up the materials for installation. All sites designated for use of "Install" materials will be within 25 miles of an Area Headquarters.

Damaged and salvaged guardrail materials shall become the property of the Contractor and shall be disposed of in accordance with Section 106 of the Specifications, unless otherwise specified.

All unused or abandoned guardrail post holes shall be backfilled to existing ground level with approved material placed in layers not more than 4 inches in height. Each layer shall be compacted by tamping. All unused or abandoned post holes in paved shoulder shall be backfilled, compacted and sealed with a fine asphalt plant mix no larger than SM-9.5A. No measurement or payment will be made for this work all cost shall be included in other items of work.

Cracks in the shoulder as a result of driving or removing guardrail posts shall be repaired at no additional cost to the Department. In soil or aggregate stabilized shoulders, cracks and voids around the posts shall be filled with like material and thoroughly compacted. In asphalt paved or surfaced treated shoulders, cracks and voids around post shall be filled, compacted, and sealed with fine asphalt plant mix no larger than SM-9.5A. No measurement or payment will be made for this work all cost shall be included in other items of work.

The Contractor shall ensure all existing guardrail and end treatments left in place are correct and all bolts, are torqued properly and cables are taut. GR-9 end treatments with 4” channel shall not be repaired, but shall be replaced with new terminals that conform to Section 505.03 of the Specifications.

All guardrail to be removed shall start at the run off end and proceed to the run on end terminal, unless otherwise approved by the Engineer.

Guardrail installation shall start at the run on end terminal and proceed to the run off end, unless otherwise approved by the Engineer.

All guardrail that is removed during the course of the work day shall be replaced the same work day, unless otherwise approved by the Engineer.

No fixed objects, which includes but not limited to bridge parapet walls, piers, blunt ends, sign structures, shall not be left unprotected. The Contractor shall use an approved NCHRP 350 approved, temporary guardrail terminal or impact attenuator service before the end of each workday to protect traffic from the fixed object. No measurement or payment will be made for temporary guardrail terminal or impact attenuator service, all cost shall be included in other items of work. The Contractor shall plan and prosecute the work accordingly.

No uncompleted sections of guardrail shall be left over weekends or holidays, unless otherwise approved by the Engineer. The Contractor shall plan and prosecute the work accordingly.

All aggregate and other material placed at the guardrail terminal end section shall be included in the pay item "guardrail terminal site preparation," according to Section 505 of the Specifications.

Build-up or debris under existing guardrail in areas where guardrail is to be replaced shall be removed to the original shoulder cross slope, in accordance with the contract Special Provisions.

Reset existing guardrail shall require the removal and disassembly of the existing w-beam and blockouts to redrill the post for the reassembly of the blockouts and w-beam to the required height specified. In the event the existing post or blockouts are determined non-compliance with the standard drawings or specifications new post or blockouts will be required and will be measured and paid for separately.

IV. MEASUREMENT AND PAYMENT

Guardrail, Reuse Guardrail, Radial Guardrail, Median Barrier, Radial Median Barrier, Cable Barrier, Guardrail Terminal, Median Barrier Terminal and **Fixed Object Attachment** will be measured and paid for in accordance with Section 505 of the Specifications.

Remove Guardrail, Reset Guardrail and **Install Guardrail** will be measured and paid for in accordance with Section 510 of the Specifications.

Sign Panel and **Guardrail Delineator** will be measured and paid for respectively in accordance with Sections 701 and 702 of the Specifications.

Drill Hole will be measured in units of each and will be paid for at the contract unit price per each, which unit price shall include drilling of hole, repairing spalled areas, and patching abandoned holes.

Re-Tension Existing Cable GR. will be measured in units of each per cable system and will be paid for at the contract unit bid price per each for the standard specified, which shall include re-tensioning the existing cable.

The items below will include removal and disposal of existing guardrail components in the unit price bid.

Guardrail Post, Guardrail Blockout and **Offset Block** will be measured in units of each for the type and standard specified and will be paid for at the contract unit price per each which price shall include furnishing and installing post, blockout and offset block and hardware.

W Beam Terminal Connector, W Beam End Section and Terminal Connector will be measured in units of each for the standard or type specified and will be paid for at the contract unit price per each, which shall include furnishing and placement, and mounting hardware.

Rubrail will be measured in units of linear feet for the type specified and will be paid for at the contract unit price per linear foot, which shall include furnishing and placement of type rubrail specified, and mounting hardware.

Guardrail Beam and Radial Guardrail Beam will be measured in units of linear feet for the type and standard specified and will be paid for in units of linear foot, which unit price shall include furnishing the type and standard beam specified, and mounting hardware.

Plate will be measured in units of each for the type and standard specified and which unit paid shall include furnishing and placing the specified plate and mounting hardware.

Cable will be will be measured in units of linear feet for the type and standard specified and will be paid for in units of linear foot, which unit price bid shall include furnishing the type and standard cable specified, and mounting hardware.

Realign Post will be measured in units of each and will be paid for at the contract bid price per each, which unit price bid shall include disconnecting and reconnecting rail and realigning the post.

BR-GR Attachment will be measured in units of each, for the type specified per attachment location and will be paid for at the contract unit bid price per each attachment, which shall include furnishing and installing guardrail, blockouts, connector, and hardware.

Steel Tube will be measured in units of each for the type and standard specified and will be paid for at the contract bid price per each, which shall include furnishing and placing of the steel tube, and excavation.

Assembly will be measured in units of each for the type and standard specified and will be paid for at the contract unit bid price per each, which shall include furnishing and placing the specified assembly.

Cable Assembly & Anchor Plate will be measured in units of each for the type and standard specified and will be paid for at the contract unit bid price, which shall include furnishing and installing the cable assembly and anchor plate for the type and standard specified, and hardware.

End Post Caps will be measured in units of each for the standard specified and paid for at the contract unit bid price per each, which shall include furnishing and installing end post caps, and hardware.

Hook Bolt will be measured in units of each for the standard specified and will be paid for at the contract unit bid price per each, which unit price bid shall include furnishing and installing hook bolts.

Angle will be measured in units of each for the type and standard specified and will be paid for at the contract unit bid price per each, which shall include furnishing and installing the specified angle, and hardware.

Soil Plate will be measured in units of each for the standard specified and will be paid for at the contract unit price per each for the standard specified, which shall include furnishing and installing the specified plate, and hardware.

Pipe Sleeve will be measured in units of each for the standard specified and will be paid for at the contract unit price per each for the standard specified, which shall include furnishing and installing the specified pipe sleeve, hardware and removal and disposal of existing pipe sleeve.

Cable Anchor Bracket will be measured in units of each for the standard specified and will be paid for at the contract unit price per each for the standard specified, which shall include furnishing and installing the specified cable anchor bracket, and hardware.

Strut will be measured in units of each for the standard specified and will be paid for at the contract unit price per each for the standard specified, which shall include furnishing and installing the specified strut, and hardware.

Guardrail Extruder will be measured in units of each for the standard specified and will be paid for at the contract unit price per each for the standard specified, which shall include furnishing and installing the specified guardrail extruder, and hardware.

Impact Attenuator Cartridge will be measured in units of each for the original manufacturers' replacement cartridge and will be paid for at the contract unit price per each for the original manufacturers replacement part and hardware, which shall include furnishing and installing in accordance with the manufacturers recommendations.

Nose Section will be measured in units of each for the original manufacturers' replacement nose section and will be paid for at the contract unit price per each for the original manufacturers' replacement part and hardware, which shall include furnishing and installing in accordance with the manufacturers recommendations.

Diaphragm will be measured in units of each for the original manufacturers' replacement diaphragm and will be paid for at the contract unit price per each for the original manufacturers' replacement part and hardware, which shall include furnishing and installing in accordance with the manufacturers recommendations.

Frame will be measured in units of each for the original manufacturers replacement frame and will be paid for at the contract unit price per each for the original manufacturers' replacement part and hardware, which shall include furnishing and installing in accordance with the manufacturers recommendations.

Side Panel will be measured in units of each for the original manufacturers' replacement side panel and will be paid for at the contract unit price per each for the original manufacturers' replacement part and hardware, which shall include furnishing and installing in accordance with the manufacturers recommendations.

Sand Barrel will be measured in units of each for the original manufacturers replacement sand barrel and will be paid for at the contract unit price per each for the original manufacturers replacement parts and hardware, which shall include furnishing and installing in accordance with the manufacturers recommendations.

Reset Existing Guardrail will be measured in units of linear feet and will be paid for at the contract unit price per linear foot. This price shall include removal of guardrail w-beam and blockouts, drilling new hole(s) in the existing post, reinstalling the w-beam and blockouts, with new hardware.

Remove and Relocate Existing Guardrail (Standard) will be measured in units of linear feet for the standard and type specified and will be paid for at the contract unit price per linear foot for the standard and type specified. This price shall include disassembly and removal of guardrail w-beam, post, blockouts, hardware, backfilling existing postholes, repairing damage to shoulders, curbing, curb backup material or concrete, transporting and storing; repairing and installing salvaged beam; and installing guardrail post, blockouts, w-beam, delineators, concrete, and new hardware.

Reuse Existing Guardrail W-Beam (Standard) will be measured and paid for at the contract unit price per linear foot. The price bid shall include salvaging and installing existing W-beam, transporting w-beam to the site, furnishing and installing new post, blockouts, delineators, new hardware.

Payment will be made under:

Pay Item	**Pay Unit**
(Type) Post (Standard)	Each
Guardrail Blockout	Each
Guardrail Beam	Linear Foot
Radial Guardrail Beam	Linear Foot
Cable (Standard)	Linear Foot
Offset Block (Type)	Each
Terminal Connector (Type or Standard)	Each
W Beam End Section (Type)	Each
Rubrail (Type)	Linear Foot
BR-GR Attachment (Type)	Each
Drill Hole	Each
(Type) Plate (Standard)	Each
Realign Post	Each
Steel Tube (Standard)	Each
(Type) Assembly (Standard)	Each
Cable Assembly & Anchor Plate (Standard)	Each
End Post Caps (Standard)	Each
Hook Bolt (Standard)	Each
(Type) Angle (Standard)	Each
Re-Tension Existing Cable GR. (Standard)	Each
Soil Plates (Standard)	Each
Pipe Sleeve (Standard)	Each
Cable Anchor Bracket (Standard)	Each
(Type) Strut (Standard)	Each
Guardrail Extruder (Standard)	Each

Impact Attenuator Cartridge	Each
Nose Section	Each
Diaphragm	Each
Side Panel	Each
Frame	Each
Sand Barrel	Each
Reset Existing Guardrail	Linear Foot
Remove And Relocated Existing Guardrail (Standard)	Linear Foot
Reuse Existing Guardrail W-Beam (Standard)	Linear Foot

SP512-030100-00

VIRGINIA DEPARTMENT OF TRANSPORTATION
SPECIAL PROVISION FOR
POLICE ASSISTANCE FOR PAVING OPERATIONS

November 6, 2013c; Reissued July 12, 2016

SECTION 512—MAINTAINING TRAFFIC of the Specifications is amended as follows:

SECTION 512.03—PROCEDURES is amended to include the following:

(z) **Police Assistance for Paving Operations:** Police assistance may be required at times for paving operations in work zones during the life of this contract to ensure the safety of the traveling public and construction personnel. The Contract will specify where police assistance is required according to the following:

1. **Interstate Routes:** Where the Contract specifies State Police assistance is required, VDOT will notify the State Police contact person. VDOT will pay for the uniformed police officer(s).

2. **Major Primary Routes (Traffic Groups XII and above):** Where the Contract specifies police assistance is required, VDOT will notify the police contact person. VDOT will pay for the uniformed police officer(s).

3. **Other Primary Routes:** The Contract will list the locations where police assistance is required and whether it is the Contractor's responsibility or VDOT's responsibility to notify the police contact person and pay for the uniformed police officer(s).

4. **Secondary Routes:** The Contractor will have the option whether to flag intersections or use uniformed police officers if this is not specified otherwise in the Contract. If the Contractor determines police assistance is necessary, he shall obtain this assistance at no cost to VDOT.

   Where VDOT determines police assistance will be required on specific routes, the Contract will list the locations and whether it is the Contractor's responsibility or VDOT's responsibility to notify the police contact person and pay for the uniformed police officer(s). If the Contract does not state the responsible party, VDOT will be responsible.

If during the life of this contract the Engineer determines that police assistance is necessary at a specific location not listed in the Contract, VDOT will notify the police contact person. VDOT will pay for the uniformed police officer(s).

If during the life of this contract the Contractor determines that police assistance is necessary at a specific location not listed in the Contract, he shall notify the police contact person. The Contractor shall obtain this assistance at no cost to VDOT.

SP700-000180-01

VIRGINIA DEPARTMENT OF TRANSPORTATION
SPECIAL PROVISION FOR
MODIFICATIONS TO AASHTO'S SIGN STRUCTURE SPECIFICATION

July 25, 2016

I. GENERAL REQUIREMENTS

Lighting (conventional and high mast), signal (overhead, mast arm and span wire), pedestal poles, overhead (span, cantilever and butterfly) sign structures and ITS structures (camera poles, dynamic message signs (DMS), etc.) shall conform to the requirements of the AASHTO *Standard Specifications for Structural Supports for Highway Signs, Luminaires, and Traffic Signals, 6th Edition (LTS-6), 2013 with 2015 interims* as modified by this Special Provision. Any AASHTO Specification optional design parameter noted as "may be used at the discretion of the owner" that are not addressed in this document shall not be used for design.

Modifications to span or height limits shown on the plans shall be approved by the Regional Traffic Engineer.

II. WIND LOADING (LTS-6 Article 3.8 and Appendix C)

1. The alternate method for wind pressures provided in AASHTO Appendix C shall be used. Linear interpolation between wind contours is not permitted. The next higher contour shall be used for design. Reduced forces shall not be used for free swinging traffic signal and free swinging sign wind loadings.

2. **LTS-6 Article C.2** is supplemented with the following: Wind speeds using 50-year mean recurrence shall be used for all conventional light poles, high mast light poles, ITS device support poles and overhead sign structures (span, cantilever and butterfly).

3. Mast arm signal poles, mast arms, and strain poles shall be designed using the following wind speeds:

VDOT Traffic Operations Region	VDOT Districts Within That Region	Design Wind Speed for strain poles, mast arms, and mast arm poles
Southwest	Bristol, Salem, and Lynchburg	70 MPH
Northwest	Staunton and Culpeper	70 MPH
Northern	Northern Virginia	80 MPH
Central	Richmond and Fredericksburg	80 MPH
Eastern	Hampton Roads	90 MPH

Mast arm signal pole and strain pole foundations shall be designed for wind speeds at the foundation location using the 25-year mean recurrence.

4. For special wind regions in Bristol District shown in Figure 3.8.3-2 of LTS-6, the selection of the design wind speed shall consider localized effects. The minimum design wind speed for 50 year mean in these areas is 90 MPH, 25 year mean in these areas is 80 MPH and 10 year mean in these areas is 70 MPH.

5. For bridge mounted structures, light poles and other site condition where structures may be elevated above the surrounding terrain, the height factor used shall be increased to account for the increased wind effects.

III. STEEL DESIGN

1. **Laminated Structures (LTS-6 Article C5.1):** Laminated or multi-ply structures shall only be used in tapered sections.

2. **Holes and Cutouts, Unreinforced and Reinforced (LTS-6 Article 5.14.5):** The location and size of hand holes and cutouts shall be in accordance with the details shown in the Standard Drawings. For high mast light poles, the width of unreinforced and reinforced holes and cutouts in the cross-sectional plane of the tube shall not be greater than 50 percent of the tube diameter at that section.

3. **Welding:** A connection detail using a full penetration groove weld with a backing ring may be considered for signal mast arms and high mast light poles. The backing ring shall be attached at the top and bottom face of the ring using a continuous fillet weld.

4. **Diameter:** Mast arm signal pole structures shall have the following maximum column and arm outside diameters, unless approved otherwise by the Engineer. If the Contractor is proposing column diameters or arm diameters that exceed these maximums, then the Contractor's submittal shall document the cost benefits to the Department that would be achieved by using the larger diameter. Calculations and drawings for both the maximum diameter and the desired size shall be included. Submittals shall also provide specific steel and fabrication cost details and structural benefits that would be achieved by using the larger diameter.

Configuration	Arm Length	Design Loading	Max. column diameter at base of column	Max. arm diameter at base of arm
Dual arm	Length of one arm exceeds 70 feet or total length of both arms exceeds 130 feet	Varies (Project specific loads will be provided by work order)	22 inches	20 inches
	All other dual-arm structures	Design loading does not exceed Standard Drawing MP-3	20 inches	18 inches
Single arm	> 75 feet	Varies (Project specific loads will be provided by work order)	22 inches	20 inches
	≤ 75 feet	"Case 2" loading as per Standard Drawing MP-3	22 inches	20 inches
		"Case 1" loading as per Standard Drawing MP-3	20 inches	18 inches

IV. FATIGUE DESIGN

1. **Fatigue Importance Categories (LTS-6 Article 11.6):** The following fatigue importance categories shall apply to structures:

Fatigue Importance Categories

Structure Type	Span Length*, ft.	Fatigue Category
All structures supporting dynamic message signs	All span lengths	Category I
Overhead sign span structure	> 150	Category I
	≤ 150	Category II
Overhead sign cantilever structure	> 50	Category I
	≤ 50	Category II
Overhead sign butterfly structure	All span lengths	Category II
Signal mast arm structure**	> 75	Category I
	50 to ≤ 75	Category II
	< 50	No fatigue design required
Overhead signal structure	> 190	Category I
	≤ 190	Category II
High mast light poles	All lengths	Category I
Signal span wires, conventional lights poles and ITS device support poles (excluding DMS)		No fatigue design required

*Span length is defined as center-to-center of column(s) for span structure and face-of-column to tip of arm for cantilever and signal structures.
**For twin mast arms, The pole, arms and connections shall be designed for the applicable fatigue category for the longest arm attached.

2. **Mitigation Devices (LTS-6 Article 11.6 and 11.7.1):** Mitigation devices shall not be used in lieu of designing for fatigue.

3. **Aluminum light poles (LTS-6 Article 11.6 and 11.7.1):** Internal first and second mode vibration dampeners shall be provided and installed according to the manufacturer's instructions in all cases. External dampeners may be used if approved by the Engineer.

4. **Galloping Loads (LTS-6 Article 11.7.1):** Galloping loads shall not be considered in the design of overhead sign cantilevered structures with four chord trusses, signal mast arm structures, and multi-chord overhead signal structures.

5. **Truck-Induced Gust Loads (LTS-6 Article 11.7.1.3):** Truck induced gust loads shall not be considered in the design of signal mast arm and overhead signal structures.

6. **Vertical Deflection (LTS-6 Article 11.8):** The vertical deflection of the free end of the arm for overhead sign cantilevered structures due to the wind load effects of galloping or truck-induced gusts shall not exceed 8".

V. FOUNDATION DESIGN

The AASHTO Standard Specifications for Highway Bridges, 1996; 1997 and 1998 Interim Specifications, as referenced in the AASHTO *Standard Specifications for Structural Supports for Highway Signs, Luminaires, and Traffic Signals*, are modified as follows:

1. **Geotechnical Design:** The factor of safety shall be as follows:

MINIMUM FACTORS OF SAFETY[1]

	Drilled Shaft		
	Overhead Sign Structures and all other types of ancillary structures except for Mast arm traffic Signals	**Mast arm traffic Signals**	**Spread Footing**
Tip resistance/ Bearing pressure	1.75	1.75	2.0
Torsion/Sliding/Skin Friction	2.0[2]	1.3[2]	1.2[3]
Overturning (Broms Method)	2.25	2.25	1.5

[1]The factors of safety shown above already account for the 1.33/1.40 group overload/overstress factor. No reduction shall be applied to the design loading used in the analysis.
[2]Torsion Resistance shall be evaluated as specified by the AASHTO LRFD BRIDGE DESIGN SPECIFICATIONS (Seventh Edition, 2014) Section 10.8.3.5- Nominal Axial Compression Resistance of Single Drilled Shafts. A value of 1.0 shall be used in lieu of the resistance factors as shown in Table 10.5.5.2.4-1.
[3]Passive resistance shall be reduced by 50% to limit foundation movement.

In capacity calculations for the foundation design of a drilled shaft, the soil resistance of the top 1.5 feet shall be neglected in the analysis for torsion/skin friction/tip resistance. The full length of the shaft from the ground surface to the tip may be used in overturning/horizontal deflection. The remainder of the shaft may be assumed to be fully effective in supporting applied loads.

2. **Horizontal Deflection:** In lieu of Broms method, COM624P or other commercially available software may be used to evaluate the overturning of shafts and to estimate shaft deflections. For mast arm signals and span wire signals, the total horizontal deflection shall be limited to 0.75 inches at the ground level and the tip of the pile deflection shall not exceed -0.25 inches. For other structures, the total horizontal deflection shall be limited to 0.50 inches at the ground level and the tip of the pile deflection shall not exceed -0.15 inches. The loading used in the analysis shall not be reduced by the allowable overload/overstress factor. The shafts shall be modeled such that the nonlinear flexural rigidity (non-linear EI, or “cracked” section) is accounted for when the horizontal deflections are calculated.

3. **Reinforcement:** Where tremie placement of concrete is anticipated, a minimum spacing of 5 inches or 10 times the size of the largest coarse aggregate whichever is greater shall be provided in both horizontal and vertical direction. For dry shafts, a smaller space of 5 times the size of the largest coarse aggregate may be considered. A dry shaft is when the amount of standing water in the base of the shaft prior to concreting is less than or equal to 3 inches and water is entering the shaft at a rate of less than 12 inches/hour.

SP703-000100-00

VIRGINIA DEPARTMENT OF TRANSPORTATION
SPECIAL PROVISION FOR
MAST ARM HANGER ASSEMBLY STD SM-3 AND SMD-2

May 25, 2016; Issued July 12, 2016

I. Description

This work shall consist of furnishing and installing mast arm signal hanger assembly (Standard SM-3) and mast arm sign hanger assembly (Standard SMD-2) for new or relocated signals and signs on mast arms and replacing existing hanger assemblies.

II. Definitions

The following terms are used as follows in this special provision:

1. **Mast Arm Hanger Assembly (Complete)**: An inclusive mast arm hanger assembly that consists of the main mount, swivel plate, mounting system, mounting tube, and miscellaneous hardware items.

2. **Mast Arm Hanger Assembly (Components)**: Main mount, swivel plate, mounting system and miscellaneous hardware items (washers, screws, bolts, or nuts).

3. **Main Mount**: The bracket component that mounts against the mast arm signal pole. Once installed, this component is fixed and is not adjusted.

4. **Swivel Plate**: The bracket component(s) that mate to the main mount. The swivel plate can be adjusted along multiple axis to allow the signal mounting tube to be positioned at different angular orientations. The mounting tube is connected to the swivel plate.

5. **Mounting System**: Stainless steel cables which connect the main mount and mast arm signal pole.

6. **Mounting Tube**: The bracket component that holds the signal head assembly, camera, or sign panel bracing to the swivel plate.

7. **Miscellaneous items**: Other components of the hanger assembly not listed above, including but not limited to: tie back, or tether clamps which fasten the cable to the mounting tube; mounting arms; cover plates; hardware (washers, screws, bolts, or nuts); caps; and seals.

8. **Special Tools**: Unique tools identified by a specific item or product number in the manufacturer's installation instructions

III. Materials

As used below: XX, XXX or xx refers to stainless steel cable length, which shall be determined by the Contractor for the specific mast arm diameter at each installation location; YY or yy refers to the mounting tube length for sign panels, which shall be determined by the Contractor for the specific sign height at each location; ## refers to the channel width, which shall be determined by the Contractor for the specific sign width at each location.

1. **Mast Arm Signal Hanger Assembly (Components) for Relocation or Maintenance Replacement – Signals**

Mast arm hanger components (main mount, swivel plate, mounting system, and associated miscellaneous items) used for signal relocation or maintenance replacement of signal hanger assemblies shall be of the following or approved equal:

Table 1: MAST ARM SIGNAL HANGER ASSEMBLY (COMPONENTS) FOR RELOCATION OR MAINTENANCE REPLACEMENT - SIGNALS	
MANUFACTURER	**MODEL**
Pelco Products, Inc.	Galaxy, Model AB-3055-XX-SS-PNC
Traffic Hardware & Design	CAN-BRAC, Model CBL-VUB-2CXX-9
General Traffic Equipment Corp.	RM - MAC - XX
Cost Cast, Inc.	Cost Cast Item # 1816-A-CXX
Sky Bracket	SKYBRACKET, Model SS-SBCXX-SCK-VA

2. **Mast Arm Signal Hanger Assembly (Complete) - Signals**
   Complete Mast Arm Hanger Assemblies used for new signals, relocated signals or maintenance replacement of signal hanger assemblies shall be of the following or approved equal:

Table 2: MAST ARM SIGNAL HANGER ASSEMBLY (COMPLETE) – SIGNALS (New Signals, Relocated Signals Or Maintenance Replacement)	
1-SECTION HEAD HANGER ASSEMBLY (IN LINE)	
MANUFACTURER	**MODEL**
Pelco Products, Inc.	Galaxy, Model AG-0125-1-XX-SS-PNC
Traffic Hardware & Design	CAN-BRAC, Model CBL-VUN1-T24-2Cyy-9
General Traffic Equipment Corp.	RM-1000C-XX-1
Cost Cast, Inc.	Cost Cast Item # 1816-G-CXX-24
Sky Bracket	SKYBRACKET, Model SS-SBCXX-18-VA
3-SECTION HEAD HANGER ASSEMBLY (IN LINE)	
MANUFACTURER	**MODEL**
Pelco Products, Inc.	Galaxy, Model AG-0125-3-XX-SS-PNC
Traffic Hardware & Design	CAN-BRAC, Model CBL-VUN1-T46-2Cyy-9
General Traffic Equipment Corp.	RM-1000C-xx-3
Cost Cast, Inc.	Cost Cast Item # 1816-G-CXX-48
Sky Bracket	SKYBRACKET, Model SS-SBCXX-46-VA
4-SECTION HEAD HANGER ASSEMBLY (IN LINE)	
MANUFACTURER	**MODEL**
Pelco Products, Inc.	Galaxy, Model AG-0125-4-XX-SS-PNC
Traffic Hardware & Design	CAN-BRAC, Model CBL-VUN1- T58-2Cyy-9
General Traffic Equipment Corp.	RM-1000C-xx-4
Cost Cast, Inc.	Cost Cast Item # 1816-G-CXX-60
Sky Bracket	SKYBRACKET, Model SS-SBCXX-60-VA
5-SECTION HEAD HANGER ASSEMBLY (CLUSTER)	
MANUFACTURER	**MODEL**
Pelco Products, Inc.	Galaxy, Model AG-0138-XX-SS-PNC
Traffic Hardware & Design	CBL-VUN2-14-T37-2CXX-9
General Traffic Equipment Corp.	RM-5C-5000C-xx
Cost Cast, Inc.	Cost Cast Item # 1816-G-CXX-5X
Sky Bracket	SKYBRACKET, Model SS-SBCXX-SCB-46-VA

3. **Mast Arm Sign Hanger Assembly (Components) for Relocation or Maintenance Replacement – Signs**
   Mast Arm Hanger Assembly components (main mount, swivel plate, mounting system, and associated miscellanies items) used for sign relocation or maintenance replacement of sign hanger assemblies shall be of the following or approved equal:

Table 3: MAST ARM SIGN HANGER ASSEMBLY (COMPONENTS) FOR RELOCATION OR MAINTENANCE REPLACEMENT - SIGNS	
MANUFACTURER	**MODEL**
Pelco Products, Inc.	Galaxy, Model AB-3055-XX-SS-PNC 1-Bracket per 16 Sq. Ft. of sign panel spaced per manufacturer's installation instructions
Traffic Hardware & Design	CBS-HU-Exx-2Cyy-3 1-Bracket per 20 Sq. Ft. of sign panel spaced per manufacturer's installation instructions
General Traffic Equipment Corp.	RM-MAC-XX 1-Bracket per 15 Sq. Ft. of sign panel spaced per manufacturer's installation instructions
Cost Cast, Inc.	Cost Cast Item # 1816-A-Cxx 1-Bracket per 16 Sq. Ft. of sign panel spaced per manufacturer's installation instructions
Sky Bracket	SKYBRACKET, Model SS-SBCXX-SCK-VA 1-Bracket per 13 Sq. Ft. of sign panel spaced per manufacturer's installation instructions
Xcessories Squared	PAX2PC30-XXX and PASCL316-XXXX 1-Bracket per 10 Sq. Ft. of sign panel spaced per manufacturer's installation instructions

4. **Mast Arm Sign Hanger Assembly (Complete) - Signs**
   Complete Mast Arm Hanger Assemblies used for new signs, relocated signs or maintenance replacement of sign hanger assemblies shall be of the following or approved equal:

Table 4: MAST ARM SIGN HANGER ASSEMBLY (COMPLETE) – SIGNS (New Signs, Relocated Signs Or Maintenance Replacements)	
MANUFACTURER	**MODEL**
Pelco Products, Inc.	Galaxy, Model AG-0142-XX-XX-SS-PNC Galaxy, Model AG-0144-XX-XX-SS-PNC 1-Bracket per 16 Sq. Ft. of sign panel spaced per manufacturer's installation instructions
Traffic Hardware & Design	CAN-BRAC, Model CBS-HU-Exx-2Cyy-3 1-Bracket per 20 Sq. Ft. of sign panel spaced per manufacturer's installation instructions
General Traffic Equipment Corp.	SMA - 3000 – XX 1-Bracket per 15 Sq. Ft. of sign panel spaced per manufacturer's installation instructions
Cost Cast, Inc.	Cost Cast Item # 1816-N-CXX-YY 1-Bracket per 16 Sq. Ft. of sign panel spaced per manufacturer's installation instructions
Sky Bracket	SKYBRACKET, Model SS-SBXX-SBK-XXTK-##-VA 1-Bracket per 13 Sq. Ft. of sign panel spaced per manufacturer's installation instructions
Xcessories Squared	PAX2PC30-XXX and PASCL316-XXXX 1-Bracket per 10 Sq. Ft. of sign panel spaced per manufacturer's installation instructions

IV. Procedures

All work shall be accomplished according to the manufacturer's installation instructions. Only the tools, special tools, and anti-seize lubricants specifically noted in the manufacturer's installation instructions shall be used. If the Contractor deviates from the manufacturer's installation instructions, the Contractor shall provide documentation from the manufacturer authorizing such deviations, including the use of alternate tools.

If a bolt tightening sequence is not specified in the manufacturer installation instructions, bolts shall be tightened in an alternating pattern for even compression.

If a main mount with fully tightened bolts requires adjustment that necessitates loosening of the main mount bolts, the mounting system and associated hardware for the mounting system (washers, screws, bolts or nuts) shall be replaced at no additional cost to the Department.

1. **Tools**: If maximum torque values are provided in the manufacturer's installation instructions, a calibrated torque wrench shall be used to verify that torque has not been exceeded. The Contractor shall calibrate torque wrenches in accordance with torque wrench manufacturer recommendations at the interval recommended by the torque wrench manufacturer. The torque wrench calibration testing lab shall be ISO, or ANSI accredited for instrument calibration.

   If special tools are identified in the manufacturer's instructions as being either required or recommended for installation the Contractor shall furnish no less than one set of tools to the Engineer per ten mast arm hanger assemblies or portion thereof, unless otherwise specified in the contract documents.

2. **Packaging**: All required components of each hanger assembly, except the mounting tube, shall be packaged as one set. The mounting tube may be packaged separately. If special tools are required, or recommended, they may be packaged separately. Under no circumstances shall the parts from multiple assemblies be mixed.

3. **New Signal or Sign Installations**: A Mast Arm Hanger Assembly (Complete) shall be used - see Table 2 for signals and Table 4 for signs.

   The Mast Arm Hanger Assembly (Complete) may be attached to the mast arm and all bolts tightened to final tightness before lifting and placing the mast arm onto the signal pole (i.e. on the ground- attached to the mast arm prior to installation of the mast arm).

4. **Relocate Existing Mast Arm Hanger Assemblies for Signals or Signs**: Existing Mast Arm Hanger Assemblies (main mount, swivel plates, mounting systems and all associated miscellaneous items) that are in service before the commencement of any project shall not be relocated on the same mast arm or reused on a different mast arm.

   The initial relocation of each existing signal or sign from its location at commencement of the project (Location A) to a new location on a mast arm (Location B) may be accomplished using one of the following at the new location on a mast arm:

   a. A new Mast Arm Hanger Assembly (Complete) – see Table 2 for signals and Table 4 for signs or

   b. New Mast Arm Hanger Assembly (Components) – see Table 1 for signals and Table 3 for signs. Existing mounting tubes, cover plates, tie backs, and tether clamps may be reused if they are compatible with the new components;

   Subsequent relocations of the signal or sign from Location B to another location may be accomplished by the Contractor using one of the following at the new location on a mast arm:

a. A new Mast Arm Hanger Assembly (Complete) – see Table 2 for signals and Table 4 for signs; or

b. New Mast Arm Hanger Assembly (Components) – see Table 1 for signals and Table 3 for signs. Existing mounting tubes, cover plates, tie backs, and tether clamps may be reused if they are compatible with the new components; or

c. New mounting system. The existing hanger assembly equipment installed for the initial relocation from Location A to Location B may be reused.

5. **Modify Existing Hanger Assembly**: Modifying an existing mast arm hanger assembly at the same location on a mast arm shall be accomplished in accordance with the following:

   New Mast Arm Hanger Assembly (Components) – see Table 1 for signals and Table 3 for signs. Existing mounting tubes, cover plates, tie backs and tether clamps may be reused if they are compatible with the new components;

6. **Remove Existing Hanger Assembly**: Removing and disposing of an existing hanger assembly or components shall be in accordance with Section 510 of the Specifications.

7. **Prosecution of Work**: The Contractor shall prosecute work in accordance with Section 703.03 of the Specifications.

   While performing this work, if the Contractor discovers any mechanical or electrical problems with the signals, or discovers any problems that require immediate repair, the Contractor shall log each problem by intersection and signal head and advise the Engineer immediately. The Engineer will instruct the Contractor how to proceed.

   The Contractor shall exercise caution during prosecution of work to prevent damage to any existing wiring, or signal component. If the Contractor damages any existing wiring, or signal equipment, repair and replacement shall be at no additional cost to the Department.

V. Reporting

For each mast arm hanger assembly (Complete or Components) installed, the Contractor shall submit the attached Mast Arm Bracket Installation Report form to the Engineer. The form shall also be submitted to the Department's email hangerassemblies@vdot.virginia.gov.

Hard copy submission of the Mast Arm Bracket Installation Report to the Engineer shall not substitute for reporting to the required email address. The Mast Arm Bracket Installation Report shall be submitted within 7 business days of mast arm hanger assembly installation.

By submitting the report, the Contractor certifies that the mast arm hanger assembly installation was accomplished in strict conformance with these specifications.

Reporting will not be measured for separate payment but shall be considered incidental to the mast arm hanger assembly work.

VI. Warranty

The Contractor shall furnish a manufacturer warranty for the Complete Mast Arm Hanger Assembly or installed components to cover defects for a minimum of three years from the date of installation. The warranty shall include providing replacements, within 10 calendar days of notification, for defective parts and equipment at no additional cost to the Department. When the warranty normally given by the manufacturer is longer than three years, the manufacturer's normal warranty shall be furnished.

VII. Measurement and Payment

Mast Arm (Type) Hanger Assembly (Standard) will be measured in units of each for the standard and type specified to be paid for at the contract unit price per each. This price shall include furnishing and installing Mast Arm Hanger Assembly (Complete), including the main mount, swivel plate, mounting system, mounting tube, miscellaneous items, reporting, and special tools (when required).

Remove Existing Traffic Signal Head Assembly will be measured in units of each and will be paid for at the contract unit price per each. Signal head assembly is defined as one or more traffic signal head sections (vehicular or pedestrian) assembled as one unit. This price shall include disconnecting the signal head assembly from existing conductor cables, removing the signal head assembly and backplate, removing and disposing of hanger assembly, and removing all associated mounting equipment, hardware, and accessories. If the traffic signal head assembly is to be reinstalled, the price also shall include reconnecting signal cables. When designated in the contract for salvage or if salvage is directed by the Engineer, this price shall include storing, protecting, and delivering to a designated Department facility.

Relocate Existing Mast Arm (Signal or Sign) will be measured in units of each and will be paid for at the contract price per each. This price shall include removing and relocating an existing traffic sign, signal head, or pedestrian signal head from an existing to proposed location, disconnecting and reconnecting conductor cables, adjusting or relocating conductor cables, removing and disposing or salvaging the existing mast arm hanger assembly, installing a new Mast Arm Hanger Assembly (Complete) or installing new Mast Arm Hanger Assembly (Components) and relocating or replacing existing miscellaneous items.

When relocation of signals or signs is accomplished when maintenance of the traffic signal is the responsibility of the Contractor as specified in Section 512 for the items Modify Signal or Temporary Traffic Control Signal, relocating existing mast arm hanger assemblies for signals or signs will not be measured separately and the cost thereof shall be included in the contract unit price of Modify Signal or Temporary Traffic Control Signal.

Modify Existing Mast Arm Hanger Assembly (Type) will be measured in units of each and will be paid for at the contract price per each. This price shall include removing an existing traffic sign, signal head, or pedestrian signal head from the existing hanger, furnishing new hanger assembly components, disconnecting and reconnecting conductor cables, removing, salvaging, and disposing of existing mast arm hanger assembly components, installing new Mast Arm Hanger Assembly (Components) and reusing or replacing existing miscellaneous items.

Payment will be made under:

Pay Item	Pay Unit
Mast Arm (Type) Hanger Assembly (Standard)	Each
Remove Existing Traffic Signal Head Assembly	Each
Relocate Existing Mast Arm (Signal or Sign)	Each
Modify Existing Mast Arm Hanger Assembly (Type)	Each

Form TE-100, VDOT Mast Arm Bracket Installation Report July 2016			VDOT MAST ARM BRACKET INSTALLATION REPORT							
Date Installation Completed	Contractor Name	Installer Name	**Bracket Location** (1 is closest to the pole. Include sign and signal head brackets. See sketch.) 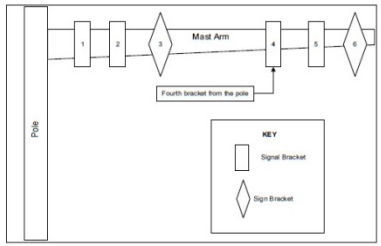	County/City	Project Number/CSC	Bracket Type (Signal or Sign)	Model Name and Number	Approach Direction (N, NE, E SE, S, SW, W, NW)	Coordinates (Enter to 6-decimal places, do not include "+", "-", "N", or "W" designations)	
									Latitude (Values should be between 36.5 and 39.5)	Longitude (Values should be between 75.3 and 83.7)
Examples										
1/2/2016	ABC Contracting	Joe Jones	4	King George		Signal	GTE RM-MAC-XX	W	37.625415	79.548621
1/2/2016	ABC Contracting	Joe Jones	6	King George		Sign	GTE RM-MAC-XX	W	37.625415	79.548621

Digital Form found at http://www.virginiadot.org/business/traffic_signal_brackets.asp

ORDER NO.: L89
CONTRACT ID. NO.: C000109813C01B

VIRGINIA DEPARTMENT OF TRANSPORTATION
SPECIAL PROVISION FOR
SECTION 105.06–SUBCONTRACTING
(STATE FUNDED PROJECTS)

February 9, 2017

SECTION 105.06–Subcontracting of the Specifications is amended to include the following:

(d) According to Commonwealth of Virginia Executive Order 20, the Contractor is encouraged to seek out and consider Small, Women-owned, and Minority-owned (SWaM) businesses certified by the Department of Small Business and Supplier Diversity (DSBSD) as potential subcontractors and vendors. Further, the Contractor shall furnish and require each subcontractor (first-tier) to furnish information relative to subcontractor and vendor involvement on the project.

For purposes of this provision, the term "vendor" is defined as any consultant, manufacturer, supplier or hauler performing work or furnishing material, supplies or services for the contract. The Contractor and, or subcontractor (first-tier) must insert this provision in each subcontract and further require its inclusion in all lower tier subcontracts (excluding purchase orders, rental agreements and other agreements for supplies or services). The applicable requirements of this provision are incorporated by reference for work done by vendors under any purchase order, rental agreement or agreement for other services for the contract. The Contractor shall be responsible for compliance by any subcontractor, lower-tier subcontractor or vendor.

The submission of a bid will be considered conclusive evidence that the Contractor agrees to assume these contractual obligations and to bind subcontractors contractually to the same at the Contractor's expense.

When an approved Form C-31 "Subletting Request" is required according to IIM-CD-2013-06.01, the Contractor shall indicate on the Subletting Request if a subcontractor is a certified DBE or SWaM business.

The Contractor shall report all SWaM vendor payments quarterly to the District Civil RightsOffice.

The Contractor shall provide the information in a format consistent with revised Form C-61 Vendor Payment Report, subject to the approval of the Engineer.

If the Contractor fails to provide the required information, the Department may delay final payment according to Specification Section 109.10 of the Specifications.

It is the policy of the Department that Small, Women-Owned, and Minority-Owned (SWaM) Businesses shall have the maximum opportunity to participate in the performance of VDOT contracts. The Contractor is encouraged to take necessary and reasonable steps to ensure that SWaM firms have the maximum opportunity to compete for and perform work on the Contract, including participation in any subsequent subcontracts. If the Contractor intends to sublet a portion of the work on the project according to the provisions of Section 105.06 of the Specifications, the Contractor is encouraged to seek out and consider SWaM firms as potential subcontractors.

SWaM participation shall be according to the special provision for Section 107.15 Use of Small, Women-Owned, And Minority-Owned Businesses (SWaMS).

ORDER NO.: L89
CONTRACT ID. NO.: C000109813C01B

VIRGINIA DEPARTMENT OF TRANSPORTATION
SPECIAL PROVISION FOR

SECTION 107.15
USE OF SMALL, WOMEN-OWNED, and MINORITY-OWNED (SWaM) BUSINESSES

July 6, 2015; Reissued July 12, 2016

SECTION 107.15—USE OF MINORITY BUSINESS ENTERPRISES (MBEs) of the Specifications is retitled **SECTION 107.15—USE OF SMALL, WOMEN-OWNED, and MINORITY-OWNED (SWaM) BUSINESSES** and replaced with the following:

It is the policy of the Department that Small, Women-Owned, and Minority-Owned (SWaM) Businesses shall have the maximum opportunity to participate in the performance of VDOT contracts. The Contractor is encouraged to take necessary and reasonable steps to ensure that SWaM firms have the maximum opportunity to compete for and perform work on the Contract, including participation in any subsequent subcontracts.

A SWaM firm shall mean a small business concern (as defined pursuant to the Code of Virginia, Title 2.2 -1401) for the purpose of reporting small, women-owned, and minority-owned business participation in VDOT contracts and purchases pursuant to §§ 2.2-1404 and 2.2-1405. To that end the following terms shall apply:

Small business means an independently owned and operated business which, together with affiliates, has 250 or fewer employees, or average annual gross receipts of $10 million or less.

Women-owned business means a business concern that is at least 51 percent owned by one or more women who are U.S. citizens or legal resident aliens, or in the case of a corporation, partnership, or limited liability company or other entity, at least 51 percent of the equity ownership interest is owned by one or more women who are citizens of the United States or non-citizens who are in full compliance with the United States immigration law, and both the management and daily business operations are controlled by one or more women who are U.S. citizens or legal resident aliens.

Minority-owned business means a business concern that is at least 51 percent owned by one or more minority individuals or in the case of a corporation, partnership, or limited liability company or other entity, at least 51 percent of the equity ownership interest in the corporation, partnership, or limited liability company or other entity is owned by one or more minority individuals and both the management and daily business operations are controlled by one or more minority individuals.

Minority individual means an individual who is a citizen of the United States or a non-citizen who is in full compliance with United States immigration law and who satisfies one or more of the following definitions:

1. African American means a person having origins in any of the original peoples of Africa and who is regarded as such by the community of which this person claims to be a part.

2. Asian American means a person having origins in any of the original peoples of the Far East, Southeast Asia, the Indian subcontinent, or the Pacific Islands, including but not limited to Japan, China, Vietnam, Samoa, Laos, Cambodia, Taiwan, Northern Mariana, the Philippines, a U.S. territory of the Pacific, India, Pakistan, Bangladesh, or Sri Lanka and who is regarded as such by the community of which this person claims to be a part.

3. Hispanic American means a person having origins in any of the Spanish-speaking peoples of Mexico, South or Central America, or the Caribbean Islands or other Spanish or Portuguese cultures and who is regarded as such by the community of which this person claims to be a part.

4. Native American means a person having origins in any of the original peoples of North America and who is regarded as such by the community of which this person claims to be a part or who is recognized by a tribal organization.

5. a member of another group, or other individual, found to be economically and socially disadvantaged by the Small Business Administration under 8(a) of the Small Business Act as amended (15 U.S.C. 637[a]).

State agency means any authority, board, department, instrumentality, institution, agency, or other unit of state government. "State agency" shall not include any county, city, or town.

A list of Virginia Department Small Business and Supplier Diversity (SBSD) certified SWaM firms is maintained on the SBSD web site (http://www.sbsd.virginia.gov) under the **SWaM Vendor Directory** link.

SWaM certification entitles firms to participate in https://www.sba.gov/; however, this certification does not guarantee that the firm will obtain work nor does it attest to the firm's abilities to perform any particular work.

The Contractor shall designate and make known to the Department a liaison officer who is assigned the responsibility of actively and effectively administering, encouraging and promoting a responsive program for the use of SWaM firms.

The performance of the Contract for the purpose of this specification shall be interpreted to include, but not necessarily be limited to, subcontracting; furnishing materials, supplies, and services; and, leasing equipment or where applicable, any combination thereof.

If the Contractor intends to sublet a portion of the work on the project in accordance with the provisions of Section 105.06 of the Specifications, the Contractor is encouraged to seek out and consider SWaM firms as potential subcontractors. The Contractor is encouraged to contact SWaM firms to solicit their interest, capability, and prices and shall retain on file the proper documentation to substantiate such contacts.

The Contractor shall report SWaM subcontractor and vendor payments in accordance with the Special Provision for **Section 105.06–Subcontracting**.

If any subcontractor is relieved of the responsibility to perform work under their subcontract, the Contractor is encouraged to take the appropriate steps to obtain a SWaM subcontractor to perform an equal or greater dollar value of the remaining subcontracted work. The substitute subcontractor's name, description of the work, and dollar value of the work shall be submitted to the Department on Form C-31 prior to such subcontractor beginning the work.

SS107-002016-04 August 10, 2017

VIRGINIA DEPARTMENT OF TRANSPORTATION
2016 ROAD AND BRIDGE SUPPLEMENTAL SPECIFICATIONS

SECTION 107—LEGAL RESPONSIBILITIES

SECTION 107—LEGAL RESPONSIBILITIES of the Specifications is amended as follows:

Section 107.01 – Laws to Be Observed is amended by inserting the following:

Where the Specifications require the Contractor to interact with government agencies other than the Department, that agency's contact information can be found at http://www.virginiadot.org/business/const/specgovag.asp.

Section 107.16(a) – Environmental Stipulations is amended by replacing the first paragraph with the following:

By signing the bid, the bidder certifies (unless the Contract is exempt under 42 USC 7606, 33 USC 1368, Executive Order 11738, and 2 CFR 1532.1140) that any facility to be used in the performance of the Contract is not listed on the Federal System for Award Management (SAM) Exclusions Public Extract according to 2 CFR 1532.1125; and that the bidder shall promptly notify the Department prior to the award of the Contract if the bidder receives any communication from the EPA, indicating that a facility to be used for the Contract is under consideration to be listed on the Federal SAM Exclusion Public Extract.

Section 107.16(a) – Environmental Stipulations is amended by deleting the third paragraph.

Section 107.16(b)2 **Air** is replaced by the following:

Air: The Contractor shall comply with Section 107.01 and the State Air Pollution Control Law and Rules of the State Air Pollution Control Board, including notifications required therein. Precautions shall be taken at all times to prevent particulate matter from becoming airborne according to 9 VAC 5-50-80 and 9 VAC 5-50-90.

Burning shall be performed in accordance with all applicable local laws and ordinances and under the constant surveillance of watchpersons. Care shall be taken so that the burning of materials does not destroy or damage property or cause excessive air pollution. The Contractor shall not burn rubber tires, asphalt, used crankcase oil, or other materials that produce dense smoke. Burning shall not be initiated when atmospheric conditions are such that smoke will create a hazard to the motoring public or airport operations. Provisions shall be made for flagging vehicular traffic if visibility is obstructed or impaired by smoke. At no time shall a fire be left unattended.

Asphalt mixing plants shall be designed, equipped, and operated so that the amount and quality of air pollutants emitted will conform to the rules of the State Air Pollution Control Board.

a. **VOC Emission Control Areas -** The Contractor is advised that when the project is located in a volatile organic compound (VOC) emissions control area identified in 9 VAC 5-20-206 or Table I-3 below the following limitations shall apply:

(1) Open burning is prohibited during the months of May, June, July, August, and September.

(2) Cutback asphalt is prohibited April through October except when use or application as a penetrating prime coat or tack is necessary. See 9 VAC 5-45-760 et seq. (Emission Standards for Asphalt Paving Operations) and 9 VAC 5-20-206 (Regulations for the Control and Abatement of Air Pollution) for further clarification.

TABLE I-3

VOC Emissions Control Area	VDOT District	Jurisdiction
Northern Virginia	NOVA	Alexandria City Arlington County Fairfax County Fairfax City Falls Church City Loudoun County Manassas City Manassas Park City Prince William County
Northern Virginia	Fredericksburg	Stafford County
Fredericksburg	Fredericksburg	Spotsylvania County Fredericksburg City
Hampton Roads	Fredericksburg	Gloucester County
Hampton Roads	Hampton Roads	Chesapeake City Hampton City Isle of Wight County James City County Newport News City Norfolk City Poquoson City Portsmouth City Suffolk City Virginia Beach City Williamsburg City York County
Richmond	Richmond	Charles City County Chesterfield County Colonial Heights City Hanover County Henrico County Hopewell City Petersburg City Prince George County Richmond City
Western Virginia	Staunton	Frederick County Winchester City
Western Virginia	Salem	Roanoke County Botetourt County Roanoke City Salem City

(3) Emission standards for asbestos incorporated in the EPA's National Emission Standards for Hazardous Air Pollutants apply to the demolition or renovation of any institutional, commercial, or industrial building, structure, facility, installation, or portion thereof that contains friable asbestos or where the Contractor's methods for such actions will produce friable asbestos.

b. The Contractor shall submit demolition notification to the EPA and the Virginia Department of Labor and Industry, in accordance with Section 107.01, a minimum of 10 business days prior to starting work on the following bridge activities:

(1) Dismantling and removing existing structures

(2) Moving an entire structure

(3) Reconstruction and repairs involving the replacement of any load-bearing component of a structure

The Contractor shall provide written notification to the Engineer a minimum of 3 full business days prior to work being performed.

Section 107.16(e)3 **SWPPP Requirements for Support Facilities** is amended to include the following:

The Contractor shall develop and enforce a Spill Prevention Control and Countermeasure (SPCC) Plan conforming to 40 CFR 112 if the aggregated volume of Oil stored within the project limits at any one time is greater than 1320 gallons. Oil, in this context, shall be defined according to 40 CFR 112. The aggregated volume includes that of both stationary and portable storage facilities but does not include individual storage containers with less than a 55 gallon capacity. The Contractor shall include the SPCC Plan as a part of his Pollution Prevention Plan for the project.

Section 107.16(e)4.a **Inspection Requirements** is replaced with the following:

Inspection Requirements: The Contractor shall be responsible for conducting site inspections according to the requirements herein. Site inspections shall include erosion, sediment control, and pollution prevention practices and facilities; all areas of the site disturbed by construction activity; all on-site support facilities; and all off site support facilities within VDOT right of way or easement. The Contractor shall document such inspections by completion of Form C-107, Construction Runoff Control Inspection Form, according to the directions contained within the form. Inspections shall be conducted using one of the following schedules:

- Schedule 1 - At least once every 7 calendar days (equivalent to the once every five business days schedule in the VPDES *General Permit for Discharge of Stormwater from Construction Activities*) and within 48 hours following any measureable storm event. If a measureable storm event occurs when there are more than 48 hours between business days, the Contractor shall perform his inspection no later than the next business day. The Contractor shall install a rain gauge at a central location on the project site for the purposes of determining the occurrence of a measureable storm event. Where the project is of such a length that one rain gauge may not provide an accurate representation of the occurrence of a measurable storm event over the entire project site, the Contractor shall install as many rain gauges as necessary to accurately reflect the amount of rainfall received over all portions of the project. The Contractor shall observe all rain gauges no less than once each business day at the time prescribed in the SWPPP General Information Sheet notes in the construction plans or other contract documents to determine if a measureable storm event has occurred. The procedures for determining the occurrence of a measurable storm event are identified in the SWPPP General Information Sheet notes in the construction plans or other contract documents.

- Schedule 2 - At least each Monday and Thursday (equivalent to the once every four business days schedule in the VPDES *General Permit for Discharge of Stormwater from Construction Activities*). Where Monday or Thursday is a non-business day, the inspection may be performed on the next business day afterward. In no case shall the inspections be performed less than once every four business days. A rain gauge will not be required when using Schedule 2.

The inspection schedule (1 or 2) is to be selected prior to the beginning of land disturbance. Once an inspection schedule is selected, it shall be defined in the appropriate note in the SWPPPP General Information Sheets contained in the construction plan set and shall be used for the duration of the project. A business day is defined as Monday through Friday excluding State holidays. A measurable storm event is defined as one producing 0.25 inches of rainfall or greater over a 24 hour time period.

For those areas of the site that have been temporarily stabilized or where land disturbing activities have been suspended due to continuous frozen ground conditions and stormwater discharges are unlikely, the inspection schedule may be reduced to once per month. If weather conditions (such as above freezing temperatures or rain or snow events) make stormwater discharges likely, the Contractor shall immediately resume the regular inspection schedule. Those definable areas where final stabilization has been achieved will not require further inspections provided such areas have been identified in the project's Stormwater Pollution Prevention Plan.

Section 107.17 – Construction Safety and Health Standards is replaced with the following:

In the performance of this Contract the Contractor shall comply with all applicable Federal, State, and local laws governing safety, health, and sanitation (23 CFR 635). The Contractor, subcontractors at any tier, and their respective employees, agents and invitees, shall at all times while in or around the project site comply with all applicable laws, regulations, provisions, and policies governing safety and health under the VOSH Standards adopted under the Code of Virginia, and any laws, regulations, provisions, and policies incorporated by reference including, but not limited to, the Federal Construction Safety Act (Public Law 91-54), 29 CFR 1926, and the Occupation Safety and Health Act (Public Law 91-596), 29 CFR 1910, and subsequent publications updating these regulations.

The Contractor shall provide all safeguards, safety devices and protective equipment, and take any other needed actions as it determines, or as the Engineer may determine, to be reasonably necessary to protect the life and health of employees on the job and the safety of the public, and to protect property in connection with the performance of the Work. The Contractor shall be responsible for maintaining and supervising all safety and health protections and programs to ensure compliance with this Section. The Contractor shall routinely inspect the project site for safety and health violations. The Contractor shall immediately abate any violations of the safety and health requirements or duties at no cost to the Department.

It is a condition of this Contract, and shall be made a condition of each subcontract, which the Contractor enters into pursuant to this Contract, that the Contractor and any subcontractor shall not permit any employees, in performance of the Contract, to work in surroundings or under conditions which are unsanitary, hazardous, or dangerous to their health or safety, as determined by the Virginia Work Area Protection Manual or under construction safety and health standards (29 CFR 1926) promulgated by the Secretary of Labor, in accordance with Section 107 of the Contract Work Hours and Safety Standards Act (40 USC 3704).

VOSH personnel, on all Federal-aid construction contracts and related subcontracts, pursuant to 29 CFR 1926.3, the Secretary of Labor or authorized representative thereof, shall have right of entry to any site of contract performance to inspect or investigate the matter of compliance with the construction safety and health standards and to carry out their duties.

The Contractor shall maintain a Jobsite Hazard Assessment in accordance with 29 CFR 1910.132 which shall be provided to the Engineer upon request and contain the following requirements, unless otherwise determined unsafe or inappropriate according to OSHA regulations:

- Hard hats shall be worn while participating in or observing all types of field work when outside of a building or outside of the cab of a vehicle, and exposed to, participating in or supervising construction.
- Respiratory protective equipment shall be worn whenever an individual is exposed to any item listed in the OSHA Standards as needing such protection unless it is shown that the employee is protected by engineering controls.
- Adequate eye protection shall be worn in the proximity of grinding, breaking of rock and/or concrete, while using brush chippers, striking metal against metal or when working in situations where the eyesight may be in jeopardy.
- A safety vest shall be worn by all exposed to vehicular traffic and construction equipment.
- Standards and guidelines of the current VWAPM shall be used when setting, reviewing, maintaining, and removing traffic controls.
- No person shall be permitted to position themselves under any raised load or between hinge points of equipment without first taking steps to support the load by the placing of a safety bar or blocking.
- Explosives shall be purchased, transported, stored, used and disposed of by a Virginia State Certified Blaster in possession of a current criminal history record check and a commercial driver's license with hazardous materials endorsement and a valid medical examiner's certificate. All Federal, State and local regulations pertaining to explosives shall be followed.
- All electrical tools shall be adequately grounded or double insulated. Ground Fault Circuit Interrupter (GFCI) protection must be installed in accordance with the National Electrical Code (NEC) and current VOSH agency. If extension cords are used, they shall be free of defects and designed for their environment and intended use.
- No person shall enter a confined space without training, permits and authorization.
- Fall protection shall be used whenever an employee is exposed to a fall 6 feet or greater.

ORDER NO.: L89
CONTRACT ID. NO.: C000109813C01B

SS242-002016-01 **February 1, 2017**

VIRGINIA DEPARTMENT OF TRANSPORTATION
2016 ROAD AND BRIDGE SUPPLEMENTAL SPECIFICATIONS

SECTION 242—FENCES

SECTION 242—FENCES of the Specifications is amended as follows:

Section 242.02(c)**2 – Posts for temporary silt fences** is replaced with the following:

Posts for temporary silt fences shall be a nominal 2 by 2 inch oak, or steel having a weight of at least 1.25 pounds per linear foot.

SS245-002016-04 **February 6, 2017**

VIRGINIA DEPARTMENT OF TRANSPORTATION
2016 ROAD AND BRIDGE SUPPLEMENTAL SPECIFICATIONS

SECTION 245—GEOSYNTHETICS AND LOW PERMEABILITY LINERS

SECTION 245—GEOSYNTHETICS AND LOW PERMEABILITY LINERS of the Specifications is amended as follows:

Section 245.03—Testing and Documentation is amended by replacing the third paragraph with the following:

Property values in these specifications represent minimum average roll values (MARV) in the weakest principal direction unless direction is otherwise specified; permittivity values specified are minimum; AOS and panel vertical strain values are maximum; mass per unit area, UV degradation, and asphalt retention values are typical.

Section 245.03(e) **Prefabricated Geocomposite Pavement Underdrain** is replaced with the following:

Prefabricated Geocomposite Pavement Underdrain: Prefabricated geocomposite pavement underdrain shall consist of a polymeric drainage core encased in a nonwoven filter fabric envelope having sufficient flexibility to withstand bending and handling without damage. Prefabricated geocomposite pavement underdrain shall conform to the following:

1. **Core:** The drainage core shall be made from an inert, polymeric material resistant to commonly encountered chemicals and substances in the pavement environment and shall have a thickness of not less than 3/4 inch. Outer surfaces shall be smooth to prevent excessive wear of bonded filter fabric.

Physical Properties	Test Method	Requirements
Compressive strength panel vertical strain and core area change	ASTM D1621/ D2412/D6364	Min. 40 psi at 20% deflection after 24 hrs at 0 deg F and at 125 deg F
Water flow rate (after 100 hr at 10 psi normal confining pressure gradient of no more than 0.1)	ASTM D4716	Min. 15 gal/min/ft width for 12-in specimen length

2. **Filter Fabric:** Geotextile shall be bonded to and tightly stretched over the core. Geotextile shall not sag or block the flow channels, shall have a life equivalent to that of the core material, and shall conform to the requirements of (c) herein.

Section 245.03(f) **Geocomposite Wall Drains** is replaced with the following:

Geocomposite Wall Drains: Prefabricated geocomposite wall drain shall consist of a polymeric drainage core encased in a nonwoven filter fabric envelope having sufficient flexibility to withstand bending and handling without damage. Geocomposite wall drains shall conform to the following:

1. **Core:** The drainage core shall be made from an inert, polymeric material resistant to commonly encountered chemicals and substances in the roadway. Outer surfaces shall be smooth to prevent excessive wear of bonded filter fabric.

Physical Property	Test Method	Requirements
Compressive strength at 20% deflection	ASTM D1621/ D2412/D6364	Min. 40 psi after 24 hrs at 0 degree F and at 125 degree F
Water flow rate (after 100 hr at 10 psi normal confining pressure and gradient of no more than 1.0)	ASTM D4716	Min. 15 gal/min/ft width (for 12-in specimen length)

2. **Filter Fabric:** Geotextile shall be bonded to and tightly stretched over both sides of the core. Geotextile shall not sag or block the flow channels, shall have a life equivalent to that of the core material, and shall conform to the requirements of (c) herein, except that grab strength requirement shall meet AASHTO M288 Table 1, Class 2.

Section 245.03(h) **Dewatering Bag** is replaced with the following:

Dewatering Bag: A nonwoven geotextile sewn together to form a bag that can be used in lieu of a de-watering basin for the purpose of filtering out suspended soil particles. The bag shall be capable of accommodating the water flow from the pump without leaking at the spout and seams.

Physical Property	Test Method	Requirements
Grab strength @ Elongation >50%(CRE/Dry)	ASTM D4632	Min. 250 lb (min)
Seam strength	ASTM D4632	90% Specified grab strength
Puncture	ASTM D6241	Min. 150 lb
Flow rate	ASTM D4491	Min. 0.189 ft3/sec/ft2(min)
Permittivity	ASTM D4491	Min. 1.2 sec-1
UV resistance	ASTM D4355	Min. 70% at 500 hr
AOS	ASTM D4751	Max. 100 sieve

Section 245.03(k) **Fabric for Use in Turbidity Curtains** is inserted as follows:

Fabric for Use in Turbidity Curtains: This fabric shall consist of synthetic fabric coated with suitable elastomeric or polymeric compound. The coating shall have a high resistance to weathering, hydrocarbons, fresh and salt water, and temperature extremes. The curtain shall form a continuous vertical and horizontal barrier for the entire width and length of each section. Seams, if required, shall be either vulcanized welded or sewn and shall develop the full strength of the fabric.

The curtain fabric shall meet the minimum requirements noted below:

Physical Properties of Turbidity Curtain Fabric

Physical Property	Requirement
Weight (oz/yd^2)	
Type I	18
Type II	22
Type III	22
Grab Tensile Strength (ASTM D 4632)	300 lbs
UV Inhibitor	Required

SS303-002016-02 January 17, 2017

VIRGINIA DEPARTMENT OF TRANSPORTATION
2016 ROAD AND BRIDGE SUPPLEMENTAL SPECIFICATIONS
SECTION 303—EARTHWORK

SECTION 303—EARTHWORK of the Specifications is amended as follows:

Section 303.02(f) **Fabric used for Turbidity Curtains** is inserted as follows:

Fabric used for Turbidity Curtains shall conform to Section 245.03(k).

Section 303.03(i) **Turbidity Curtain** is replaced with the following:

Turbidity Curtain: This work consists of installation, maintenance, and removal of a turbidity curtain, including all necessary cables, weights, and floats in accordance with this provision and in conformity with the lines, grades and details shown on the Plans or established by the Engineer. The curtain shall be provided as a temporary measure to minimize the drift of suspended material during construction of the Project.

Type I turbidity curtain shall be used in protected areas that are sheltered from waves; and exposed only to light winds, and to current velocities of less than one foot per second.

Type II turbidity curtain shall be used in areas subject to small to moderate current velocities (up to 2 knots or 3.5 feet per second) or moderate wind and wave action.

TYPE III turbidity curtain shall be used in areas subject to considerable current (up to 3 knots or 5 feet per second), tidal action, or where the curtain is potentially subject to wind and wave action.

In locations with currents greater than 3 knots (5 feet per second) perpendicular to the barrier, or weather conditions that cause a turbidity barrier to be ineffective, a turbidity barrier shall not be used.

Floatation shall be flexible, buoyant units contained in a floatation sleeve or collar attached to the curtain. Buoyancy provided by the floatation units shall be sufficient to support the required width of the curtain and maintain a freeboard of at least 3 inches above the water surface level, to a minimum of one foot above the bottom or a maximum ten foot depth at all stages of water levels.

Load lines shall be fabricated into the top and bottom of the curtain. The top load line shall consist of woven webbing or vinyl-sheathed steel cable and shall have a minimum break-strength of 9,800 pounds. The bottom load line shall consist of a chain incorporated into the bottom hem of the curtain of sufficient weight to serve as ballast to hold the curtain in a vertical position. Additional anchorage shall be provided if necessary to top load lines. The load lines shall have suitable devices, which develop the full breaking strength for connecting to load lines in adjacent sections.

The Contractor shall submit Working Drawings to the Engineer for review in accordance with Section 105.

The curtain shall be placed at the locations shown on the Plans and in accordance with the approved Working Drawings. The Contractor shall maintain the turbidity curtain in order to ensure the continuous protection of the waterway.

The curtain shall extend the entire depth of the watercourse whenever the watercourse is not subject to tidal action or significant wind or wave action.

In tidal or wind-and-wave action situations, the curtain shall never touch the bottom. A minimum 1-foot gap shall be established between the weighted lower end of the skirt and the bottom at the mean low water.

Turbidity curtains installed in a navigable waterway shall be marked with lighted buoys that conform to U.S. Coast Guard regulations.

When the curtain is no longer required as determined by the Engineer, the curtain and related components shall be removed in such a manner as to minimize turbidity. The curtain and related components shall become the property of the Contractor and shall be removed from the project.

Section 303.06(e)20 **Turbidity Curtain** is replaced with the following:

Turbidity curtain will be measured in linear feet from edge of the curtain along the support cable. Turbidity curtain will be paid for at the contract unit price per linear foot for the type specified. This price shall include design details, furnishing, installing, maintaining, and removal of all materials necessary to complete the work.

SS505-002016-02 March 15, 2017

VIRGINIA DEPARTMENT OF TRANSPORTATION
2016 ROAD AND BRIDGE SUPPLEMENTAL SPECIFICATIONS

SECTION 505—GUARDRAIL AND W-BEAM MEDIAN BARRIERS

SECTION 505—GUARDRAIL AND W-BEAM MEDIAN BARRIERS of the Specifications is amended as follows:

Section 505.03—Procedures is amended to replace the sixteenth paragraph with the following:

The Contractor shall submit two copies of the manufacturers' recommended installation instructions and the FHWA NCHRP 350 or MASH approval letter for the type of new or salvaged guardrail end treatments being installed on the project to the Engineer at least 2 weeks before starting guardrail end terminal installation. All end terminals shall be from manufacturers on the Materials Division's Approved Products List 12 and the VDOT NCHRP 350 or MASH approved list linked in List 12. New Type I Re-Directive Impact Attenuators and Guardrail Terminals shall be permanently identified by stamping or engraving in a location readily visible for inspection that is not susceptible to damage. The identification shall include Manufacturer, Date and Site of Manufacture, and Model Number.

Section 505.03(d) – Adjusting existing guardrail is amended by replacing the first paragraph with the following:

Adjusting existing guardrail beam shall consist of removing and disassembling the existing guardrail beam and offset blocks from the posts, drilling the post in accordance with the standard drawing, and reassembling the offset blocks and guardrail beam to the height required by current Standard Drawings or Specifications. Adjusting the existing guardrail beam shall be limited to 4 inches. Adjusting guardrail beam shall be limited to steel posts and shall be in accordance with the plan details and Standard Drawings. Adjusting existing guardrail beam will not be permitted within the pay limits of end terminals. The terminal shall be completely removed and reinstalled or a new terminal installed in accordance with the Standard Drawings and the manufacturer's instructions.

Adjusting existing guardrail to meet the GR-MGS1 or GR-MGS1A Standard Drawings will not be permitted.

Section 505.04 – Measurement and Payment is amended by replacing the fifth paragraph with the following:

Terminal treatment or end anchorage for beam guardrail, cable guardrail, and steel median barriers terminating on the roadway side of the ditch line will be measured in units of each and will be paid for at the contract unit price per each.

Section 505.04 – Measurement and Payment is amended by inserting the following:

Guardrail height transition (Standard) will be measured in units of each and will be paid for at the Contract each price. This price shall include furnishing and placing posts, offset blocks, and all hardware necessary to fully install the height transition.

Section 505.04 – Measurement and Payment is amended by revising the Pay Item Table as follows:

The following pay items are inserted:

Pay Item	Pay Unit
Guardrail end anchorage (Standard)	Each
Guardrail height transition (Standard)	Each

SS704-002016-02 February 3, 2017

VIRGINIA DEPARTMENT OF TRANSPORTATION
2016 ROAD AND BRIDGE SUPPLEMENTAL SPECIFICATIONS
SECTION 704—PAVEMENT MARKINGS AND MARKERS

SECTION 704—PAVEMENT MARKINGS AND MARKERS of the Specifications is amended as follows:

Section 704.01—Description is replaced with the following:

This work shall consist of establishing the location of retroreflective pavement markings and installing pavement markings and pavement markers in accordance with the *MUTCD*, the Contract, and as directed by the Engineer.

Section 704.02—Materials is amended to include the following:

(d) **Contrast Pavement Markings** shall conform to Section 246 of the Specifications.

Section 704.03(a)2 **Type B markings** is amended to replace the first paragraph with the following:

Type B markings shall be applied in accordance with the manufacturers' installation instructions.

Section 704.03(a)2.e **Patterned preformed tape (Class VI)** is amended to replace the third, fourth, and fifth paragraph with the following:

The Contractor shall ensure that markings are not degraded by subsequent operations. Markings that are improperly inlaid during the pavement operations shall be completely eradicated and reapplied via non-embedded surface application at the Contractor's expense.

Surface-applied Type B Class VI markings shall not be installed directly over existing markings, except that Type B Class VI markings may be installed over Type A markings that are fully dry and are at a thickness of 10 mils or less.

Section 704.03(a)2.f **Polyurea (Class VII)** is replaced with the following:

Polyurea (Class VII) shall be applied in accordance with the manufacturer's installation instructions. Polyurea marking material shall not be applied over existing pavement markings unless the existing marking is 90 percent worn away or eradicated; or over Type A markings that are fully dry and are at a thickness of 10 mils or less.

Polyurea marking material shall be applied at a wet film thickness of 20 mils (± 1 mil). Glass beads and retroreflective optics shall be applied at the rate specified in the VDOT Materials Division's Approved Products List 74 for the specific polyurea product.

Section 704.03(b) **Pavement messages and symbols markings** is amended to replace the second paragraph with the following:

Message and symbol markings include, but shall not be limited to, those detailed in Standard Drawing PM-10.

Section 704.04—Measurement and Payment is amended to replace the second paragraph with the following:

Contrast Pavement Line Marking will be measured in linear feet and will be paid for at the Contract unit price per linear foot for the type or class and width specified. This price shall include surface preparation, premarking, furnishing, installing, quality control tests, daily log, guarding devices, primer or adhesive, glass beads, reflective optics materials when required, and warranty.

Pavement message markings will be measured in units of each per location or in linear feet as applicable and will be paid for at the Contract unit price per each or linear foot. This price shall include surface preparation, premarking, furnishing, installing, quality control tests, daily log, guarding devices, primer or adhesive, glass beads, reflective optics materials when required, and warranty.

Pavement symbol markings will be measured in units of each per location for the symbol and type material specified and will be paid for at the Contract unit price per each. This price shall include surface preparation, premarking, furnishing, installing, quality control tests, daily log, guarding devices, primer or adhesive, glass beads, reflective optics materials when required, and warranty.

Section 704.04—Measurement and Payment is amended to replace the Pay Item Table with the following:

Pay Item	Pay Unit
(Type or class) Pavement line marking (width)	Linear Foot
(Type or Class) Contrast Pavement Line Marking (width)	Linear Foot
Pavement message marking (Message)	Each or Linear Foot
Pavement symbol marking (Symbol, Type or class material)	Each
(Type) Pavement marker (type pavement)	Each

ORDER NO.: L89
CONTRACT ID. NO.: C000109813C01B

VIRGINIA DEPARTMENT OF TRANSPORTATION
SPECIAL PROVISION FOR

SECTION 105.08 - COOPERATION WITH REGARD TO UTILITIES
Facilities owned by Verizon Virginia and Dominion Virginia Power

January 23, 2017

Section 105.08 - Cooperation with Regard to Utilities is amended to include the following:

VERIZON VIRGINIA

During the life of this project, the telecommunication manholes owned and operated by Verizon. Virginia (Verizon), located within the project construction limits, will require adjustment to the finished grade.

The Contractor shall not consider the description of the facilities herein or the description of the adjustments being made to these facilities as being inclusive of all facilities belonging to Verizon on this project or all adjustments being made to these facilities.

The existing surface access points (handhole and manhole lids) at the following locations that will need to be adjusted to the finished grade are listed in the Special Provision for Section 510 herein.

STREET	APPROXIMATE LOCATION	
WB LEE HWY.	STATION 610+36.35	2.45' RT
WB LEE HWY.	STATION 610+88.07	9.99' LT
WB LEE HWY.	STATION 611+78.42	15.87' LT
WB LEE HWY.	STATION 611+82.96	11.60' LT
WB LEE HWY.	STATION 614+05.84	13.65' LT
N. LYNN ST.	STATION 105+22.13	43.68' RT
N. LYNN ST.	STATION 105+28.32	43.53' RT
N. LYNN ST.	STATION 105+98.56	50.82' RT

The Contractor shall coordinate the adjustment of the facilities owned by VERIZON with the telephone company's representative, Mr. Mickelson, Verizon 4242 Duke Street, Basement, Alexandria, VA 22304, Telephone (703) 212-5270.

DOMINION VIRGINIA POWER

During the life of this project, the distribution power facilities owned and operated by Dominion Virginia Power (VAP), located within the project construction limits, will require adjustment to the finished grade.

The Contractor shall not consider the description of the facilities herein or the description of the adjustments being made to these facilities as being inclusive of all facilities belonging to Dominion Virginia Power on this project or all adjustments being made to these facilities.

The existing surface access points (manhole lids) at the following locations will need to be adjusted to the finished grade of features to be constructed within the roadway contract.

WB LEE HWY.	STATION 601+43.20	22.93' LT
WB LEE HWY.	STATION 601+48.66	22.89' LT
WB LEE HWY.	STATION 605+12.98	12.28' LT
WB LEE HWY.	STATION 605+19.52	12.36' LT
WB LEE HWY.	STATION 609+14.08	4.00' LT
WB LEE HWY.	STATION 609+20.43	4.47' LT

WB LEE HWY.	STATION 610+94.35	3.00' LT
WB LEE HWY.	STATION 611+63.41	0.24' LT
WB LEE HWY.	STATION 612+61.49	3.57' RT
WB LEE HWY.	STATION 612+86.49	2.94' RT
WB LEE HWY.	STATION 613+19.99	1.01' RT
WB LEE HWY.	STATION 613+73.76	8.12' RT
WB LEE HWY.	STATION 613+73.92	1.61' RT
N. LYNN ST.	STATION 105+09.75	6.31' LT
N. LYNN ST.	STATION 105+44.83	10.73' LT
N. LYNN ST.	STATION 105+44.87	15.52' LT
N. LYNN ST.	STATION 108+27.90	5.96' LT
N. LYNN ST.	STATION 108+35.07	5.80' LT

The Contractor shall coordinate the adjustment of the facilities owned by VA POWER with the electrical utility company's representative, Mr. Tyree Whitehead, Dominion Virginia Power, 3072 Centerville Road, Herndon, VA 20171, Telephone (571) 203-5241.

The Contractor shall coordinate field activities to accommodate Verizon and Dominion Virginia Power adjusting the items listed herein to the finished grade. Coordination and cooperation with the utility companies are incidental to the roadway construction.

Any cost incurred by the Contractor or by the utility owner to facilitate this coordination and work to occur shall be the responsibility of the Contractor. There will be no additional time or compensation granted to the Contractor for the protection of the facilities or repairs if damaged by construction activities.

Cooperation with utility companies will not be measured for payment but the cost thereof shall be included in the price of other items.

ORDER NO.: L89
CONTRACT ID. NO.: C000109813C01B

VIRGINIA DEPARTMENT OF TRANSPORTATION
SPECIAL PROVISION FOR

SECTION 108.02 – LIMITATION OF OPERATIONS

February 7, 2017

SECTION 108.02 – LIMITATIONS OF OPERATIONS of the Specifications is amended to include the following:

All work areas (and the limits thereof) and lane closures shall be in accordance with the ***Virginia Work Area Protection Manual*** and shall be approved by the Engineer.

Traffic control devices shall be kept clean, legible, and in proper working order at all times. The Contractor shall provide a person whose responsibility shall be to inspect and maintain signs, barricades, other channelizing devices, and lights while traffic is restricted due to the Contractor's operations.

The Contractor shall not conduct operations requiring lane closures when the weather causes unsafe conditions for the traveling public as determined by the Engineer.

The Contractor shall submit lane and shoulder closure requests to the Engineer for approval seven (7) days in advance, stating the location, purpose, date, time, and duration of the closure. Confirmation shall be made twenty-four (24) hours before any scheduled lane closure and shall include a written reiteration of the proposed tasks and a list of materials, labor, and equipment to be used.

Complete road closures (for maximum of 20 minutes) require a seventy-two (72) hour advance confirmation for coordination. The Contractor shall provide adequate advance notification via variable message and required static signing for lane closures in accordance with the latest version of the *Virginia Work Area Protection Manual*. Once a closure is in place, work shall commence immediately and shall progress on a continuous basis to completion or to a designated time.

All closures in the Express Lanes on either I-95 or I-495 shall be coordinated with the Express Lanes Operations Center at least 5 business days in advance using their Authorization to Work form (available from the Express Lanes Operations Center at (571) 419-6046. Complete road closures on 95 Express Lanes and 495 Express Lanes shall not exceed 30 minutes.

Interstate 66

Bridge and retaining wall work shall be accessed from N. Lynn Street and Ramp K. Any proposed temporary shoulder or lane closures on I-66 shall be approved by the Engineer. Temporary shoulder and right or left lane closures shall be in accordance with the Virginia Work Area Protection Manual Figures TTC-4.1, TTC-17.1 and TTC-17.2 respectively.

Short duration closures of the eastbound access lane between N. Oak Street and N. Nash Street require approval by the Engineer.

No lane closure signing or other traffic disruptive work may be initiated outside the times specified. All signs, equipment, and materials shall be removed before the ending closure time indicated. No lane closures will be permitted outside the times detailed herein without the written authorization from the Engineer.

Extension of a lane closure time is not acceptable. Any changes to the allowable time periods above will require approval in accordance with the Contractor Proposed Alternative Traffic Control Plans special provision copied note. If the Contractor does not restore traffic lanes within the allowable time limits, the Contractor will not be allowed further lane closures until the reasons for the failure are evaluated and the Contractor can provide assurance that the causes have been corrected.

Restoration of traffic is defined as opening all travel lanes to traffic including the completion of all construction work, removing or relocating all work zone traffic control devices and signs to their approved site as determined by the VDOT Engineer, and removing all workers, materials and equipment from the roadway.

Failure to restore all lanes of traffic by the time limits defined herein will be handled as follows:

The Contractor will not be allowed further lane closures until the reasons for the previous failure are evaluated.

A formal submission as to the reasons for the failure to restore traffic lanes within the contract lane closure restrictions and the proposed corrective measures is to be provided to the VDOT Project Manager within two (2) days of the occurrence. A meeting with the District Construction Engineer or designee shall be required prior to the next scheduled lane closure at which the Contractor must be able to provide assurances to the Engineer that adjustments have been made to eliminate the operational causes of failure to restore all lanes of traffic within the time limits herein. No modifications to the Contract Time(s) will be granted or considered for these days.

When applicable, disincentives will be assessed on this project, or sections thereof, designated as subject to disincentives.

The Engineer may change any or all of the work hours stated below when such changes are in the best interest of the traveling public. The Engineer may monitor traffic conditions impacted by the work and make additional restrictions as necessary; i.e., terminate a lane closure early when excessive traffic backups occur or emergency situations dictate. Additional restrictions for other holidays or special local events may be necessary. In these situations the Engineer will endeavor to inform the Contractor at the earliest opportunity and in no case less than 48 hours before the event. Incidents may occur while the project is under construction related to transportation near the project site. Large numbers of pedestrians and vehicles can converge to, and ingress and egress the project area. If such an incident occurs, the Engineer will require the Contractor to stop work and remove any temporary lane, sidewalk, or path closures within two hours of the notification. All pedestrian and vehicular travel ways with the Project area shall be clear and accessible.

The Contractor shall assume that there will be three (3) separate incidents that will result in eight hour of lost work and plan for such schedule interruptions. Responding to three such schedule interruptions will not be eligible for additional compensation or time extensions.

Night Work

In areas where work will be performed during the hours of dusk or darkness, the Contractor shall furnish, place, and maintain lighting facilities capable of providing a minimum of 50 foot candles of light for an area of approximately 15 feet by 15 feet with minimum of 5 foot candles in the corners. The lights shall be arranged so as not to interfere with or impede traffic approaching the work site(s) from either direction or produce undue glare to property owners.

Lighting of work site(s) may be accomplished by using of any combination of portable floodlights or standard equipment lights, etc. that will provide the sufficient illumination for prosecution and inspection of the work, including, but not limited to, laying out and installing pavement markings and traffic loops. Un-supplemented lighting integral to or attached to working mobile equipment such as rollers, pavers, etc. will not be considered sufficient to meet the requirements of this specification.

The cost of providing lighting of the work site will be considered incidental and shall be included in the contract item unit prices of other work.

The Contractor shall provide sufficient fuel, spare lamps, generator, etc. to maintain the lighting of the work site. The Contractor shall use padding and shielding or locate mechanical and electrical equipment to minimize noise generated by lighting operations as directed by the Engineer. Noise generated by portable generators shall comply with all applicable Federal, State and Local environmental regulations.

The Contractor shall have a superintendent present during nighttime operations who will control all operations involved. The superintendent shall maintain contact with the Engineer and shall ensure that all actions required to correct any noted problems are taken promptly.

All private vehicles shall be parked outside the clear zone.

The Contractor shall review traffic control devices to ensure proper installation and working order, including monitoring of lights. The individual responsible for this review shall be qualified in accordance with Section 105.14 (a) of the Specifications.

Sound levels resulting from the Contractor's operations shall conform to Section 107.16; (b), 3. of the Specifications. The Contractor shall obtain all noise permits from the locality where the work is being performed as applicable.

Construction in Residential Subdivisions

Road work within residential subdivisions and/or cul-de-sac streets shall not be done at night unless circumstances require night work and the Contractor obtains advance approval from the Engineer and conducts outreach to the residents that may be impacted to avoid noise issues.

Section 108.02 (b) **Holidays** of the Specifications is amended to include the following:

- **Martin Luther King Jr. Day and Lee Jackson Day**: As indicated below*.
- **President's Day**: As indicated below*.
- **Inauguration Day**: From Noon on the preceding day until Noon on the following day, except as indicated below*.
- **Easter**: As indicated below*.
- **September 11th**: From Noon on the preceding day until Noon on the following day, except as indicated below*.
- **Columbus Day**: As indicated below*.
- **Veteran's Day**: From Noon on the preceding day until Noon on the following day, except as indicated below*.

If the Holiday occurs on a Friday or Saturday: From Noon on the preceding Thursday to Noon on the following Monday.
If the Holiday occurs on a Sunday or Monday: From Noon on the preceding Friday to Noon on the following Tuesday.

*Note:

For low volume roadways (minor arterial), no lane closure is allowed during the holidays, but no restriction to the preceding day and the following day.

If an approved shoulder closure is required to protect from traffic hazards, no time restrictions will apply, but the Contractor shall continuously prosecute the work and remove the shoulder closure as soon as the hazard is addressed.

Special Events

No work shall be performed on the project during the following special events:

Marine Corps Marathon	Last Sunday of October
Army 10 Miler	Sunday in October
Arlington Police, Fire & Sheriff 9-11 Memorial 5K	Weekend Day Closest to September 11th

The Contractor shall close work zones in advance of these events such that impacts to parking and sidewalks are minimized.

Hours of Work

The Contractor may work Monday through Friday during the hours allowed by the County noise ordinance. All work required to be completed at night will require an exception from the County noise ordinance. See the Transportation Management Plan in the contract documents for additional information.

The Contractor may work Saturday and Sunday within the limitation of the County noise ordinance. Saturday and Sunday hours are limited to between 10:00 am and 6:00 pm for the types of work associated with this project.

Setup or take down of maintenance of traffic devices shall not occur outside of the restricted work hours.

Driveways shall remain open and passable at all times except that the Contractor will be allowed to close the driveways for a period of six hours to demolish, grade, form, and pour concrete and place steel plates. Upon concrete curing the Contractor will be allowed to close the driveways for a period of two hours in order to remove the steel plates, restoration, etc. Closure times shall be limited to 10:00 pm and 10:00 am.

The Contractor shall notify the managers of the following buildings and/or businesses seventy-two (72) hours in advance of any closure.

Marriott Property:

Brian Hilger, General Manager
1401 Lee Highway Arlington VA 22209
Brian.Hilger@marriott.com
(240) 284-1461

ORDER NO.: L89
CONTRACT ID. NO.: C000109813C01B

INTERSTATE 395 & INTERSTATE 95					
WEEKDAY		Northbound			
		Single-Lane Closures or Shoulder	Two-Lane Closures	Multiple-Lane Closures	Complete Road Closure
Segment 1	14th St. Bridge to Springfield Interchange	10:00AM to 3:00PM 9:00PM to 5:00AM	10:00PM to 5:00AM	11:00PM to 5:00AM	12:00AM to 4:00AM
Segment 2	Springfield Interchange to Rt.123	9:30AM to 3:30PM 9:00PM to 5:00AM	10:00PM to 5:00AM	11:00PM to 5:00AM	12:00AM to 4:00AM
Segment 3	Rt.123 to Prince William / Stafford County line	9:30AM to 3:30PM 9:00PM to 5:00AM	10:00PM to 4:30AM	11:00PM to 4:00AM	12:00AM to 4:00AM
Segment 4	Prince William / Stafford County line to Rt.3 Exit 130	9:30AM to 3:30PM 9:00PM to 4:30AM	10:00PM to 4:30AM	n/a	12:00AM to 4:00AM
Segment 5	Rt.3 Exit 130 to Caroline / Hanover County line	9:00AM to 3:30PM 9:00PM to 5:30AM	10:00PM to 4:30AM	n/a	12:00AM to 4:00AM
All lanes open at 12:00 noon on Friday					

INTERSTATE 395 & INTERSTATE 95					
WEEKDAY		Southbound			
		Single-Lane Closures or Shoulder	Two-Lane Closures	Multiple-Lane Closures	Complete Road Closure
Segment 1	14th St. Bridge to Springfield Interchange	10:00AM to 2:30PM 9:30PM to 5:00AM	10:00PM to 5:00AM	11:00PM to 5:00AM	12:00AM to 4:00AM
Segment 2	Springfield Interchange to Rt.123	9:00AM to 2:00PM 9:30PM to 5:00AM	10:00PM to 5:00AM	11:00PM to 5:00AM	12:00AM to 4:00AM
Segment 3	t.123 to Prince William / Stafford County line	9:00AM to 2:00PM 9:30PM to 6:00AM	10:00PM to 5:00AM	11:00PM to 5:00AM	12:00AM to 4:00AM
Segment 4	Prince William / Stafford County line to Rt.3 Exit 130	9:00AM to 2:00PM 9:30PM to 6:00AM	10:00PM to 5:30AM	n/a	12:00AM to 4:00AM
Segment 5	Rt.3 Exit 130 to Caroline / Hanover County line	9:00AM to 3:00PM 9:30PM to 6:00AM	10:00PM to 5:30AM	n/a	12:00AM to 4:00AM
All lanes open at 11:00am on Friday					

ORDER NO.: L89
CONTRACT ID. NO.: C000109813C01B

INTERSTATE 395 & INTERSTATE 95			
WEEKEND	**Northbound/Southbound***		
	Single-Lane Closures or Shoulder	**Multiple-Lane Closures**	**Complete Road Closure**
Friday to Saturday	10:00PM to 7:00AM	11:00PM to 6:00AM	12:00AM to 5:00AM
Saturday to Sunday	10:00PM to 7:00AM	11:00PM to 6:00AM	12:00AM to 5:00AM
Sunday to Monday	10:00PM to 5:00AM	11:00PM to 4:00AM	12:00AM to 4:00AM
* For special operations, depending on time of year, additional hours may be allowed with proper ADA/ROD approval.			

	REVERSIBLE LANES (HOV & EXPRESS LANES)*	
	Single-Lane Closures or Shoulder	**Complete Road Closure****
WEEKDAY	9:30PM (Sunday to Thursday) to 4:00AM (Monday to Friday)	11:00PM to 4:00AM
WEEKEND	11:00PM (Friday to Saturday) to 9:00AM (Saturday to Sunday)	11:00PM to 4:00AM
*.Direction of traffic control for all lane closures in reversible lanes will need to be adjusted as necessary to face direction of traffic. ** Complete Road Closure on Express Lanes limited to 30 minutes or less.		

ORDER NO.: L89
CONTRACT ID. NO.: C000109813C01B

INTERSTATE 495 (BELTWAY)					
WEEKDAY		**Inner Loop**			
		Single-Lane Closures or Shoulder	**Two-Lane Closures**	**Multiple-Lane Closures**	**Complete Road Closure**
Segment 1	A. L. Bridge to Springfield Interchange	10:00AM to 3:00PM 9:30PM to 5:00AM	10:00PM to 5:00AM	11:00PM to 5:00AM	12:00AM to 5:00AM
Segment 2	Springfield Interchange to W.W. Bridge	10:00AM to 3:00PM 9:30PM to 5:00AM	10:00PM to 5:00AM	11:00PM to 5:00AM	12:00AM to 5:00AM
All lanes open at 12:00 noon on Friday					
WEEKDAY		**Outer Loop**			
		Single-Lane Closures or Shoulder	**Two-Lane Closures**	**Multiple-Lane Closures**	**Complete Road Closure**
Segment 1	A. L. Bridge to Springfield Interchange	9:30AM to 2:30PM 9:30PM to 5:00AM	10:00PM to 5:00AM	11:00PM to 5:00AM	12:00AM to 5:00AM
Segment 2	Springfield Interchange to W.W. Bridge	10:00AM to 3:00PM 9:30PM to 5:00AM	10:00PM to 5:00AM	11:00PM to 5:00AM	12:00AM to 5:00AM
All lanes open at 12:00 noon on Friday					

WEEKEND	**Inner/Outer Loop**		
	Single-Lane Closures or Shoulder	**Multiple-Lane Closures**	**Complete Road Closure**
Friday to Saturday	10:00PM to 8:00AM	11:00PM to 7:00AM	12:00AM to 5:00AM
Saturday to Sunday	10:00PM to 9:00AM	11:00PM to 8:00AM	12:00AM to 5:00AM
Sunday to Monday	9:30PM to 5:00AM	11:00PM to 5:00AM	12:00AM to 5:00AM

INTERSTATE 495 (BELTWAY)		
	EXPRESS LANES	
	Single-Lane Closures or Shoulder	**Complete Road Closure****
WEEKDAY	9:30PM (Sunday to Thursday) to 4:00AM (Monday to Friday)	11:00PM to 4:00AM
WEEKEND	11:00PM (Friday to Saturday) to 9:00AM (Saturday to Sunday)	11:00PM to 4:00AM
** Complete Road Closure on Express Lanes limited to 30 minutes or less.		

INTERSTATE 66					
WEEKDAY		**Eastbound**			
		Single-Lane Closures or Shoulder	**Two-Lane Closures**	**Multiple-Lane Closures**	**Complete Road Closure**
Segment 1	Prince William County line to Route 286	10:00AM to 3:30PM 8:00PM to 5:00AM	9:00PM to 5:00AM	10:00PM to 5:00AM	12:00AM to 4:00AM
Segment 2	Route 286 to Beltway	11:00AM to 3:30PM 9:00PM to 5:00AM	10:00PM to 5:00AM**	11:00PM to 5:00AM**	12:00AM to 4:00AM
Segment 3	Beltway to TR Bridge (Inside Beltway)	9:30PM to 5:00AM	n/a	n/a	12:00AM to 4:00AM
All lanes open at 12:00 noon on Friday					
WEEKDAY		**Westbound**			
		Single-Lane Closures or Shoulder	**Two-Lane Closures**	**Multiple-Lane Closures**	**Complete Road Closure**
Segment 1	Prince William County line to Route 286	9:00AM to 2:30PM 9:00PM to 6:00AM	9:30PM to 6:00AM	10:30PM to 5:00AM	12:00AM to 4:00AM
Segment 2	Route 286 to Beltway	9:00AM to 2:00PM* 9:30PM to 5:00AM	10:00PM to 5:00AM**	11:00PM to 5:00AM**	12:00AM to 4:00AM
Segment 3	Beltway to TR Bridge (Inside Beltway)	9:30AM to 2:00PM* 10:00PM to 5:00AM	10:00PM to 5:00AM**	n/a	12:00AM to 4:00AM
All lanes open at 12:00 noon on Friday					
*** Only be considered for three lane segment.** ** Consider opening shoulder lane, where Applicable.					

ORDER NO.: L89
CONTRACT ID. NO.: C000109813C01B

INTERSTATE 66			
WEEKEND	**Eastbound/Westbound**		
Outside Beltway	**Single-Lane Closures or Shoulder**	**Multiple-Lane Closures**	**Complete Road Closure**
Friday to Saturday	9:00PM to 9:00AM	10:00PM to 6:00AM	12:00AM to 5:00AM
Saturday to Sunday	9:00PM to 9:00AM	10:00PM to 6:00AM	12:00AM to 5:00AM
Sunday to Monday	8:00PM to 5:00AM	9:00PM to 5:00AM	12:00AM to 4:00AM
Inside Beltway	**Single-Lane Closures or Shoulder**	**Multiple-Lane Closures**	**Complete Road Closure**
Friday to Saturday	10:00PM to 6:00AM	n/a	12:00AM to 5:00AM
Saturday to Sunday	10:00PM to 6:00AM	n/a	12:00AM to 5:00AM
Sunday to Monday	9:30PM to 5:00AM	n/a	12:00AM to 4:00AM

ROUTE 267 CONNECTOR				
WEEKDAY	**Eastbound**		**Westbound**	
	Single-Lane Closures or Shoulder	**Complete Road Closure**	**Single-Lane Closures or Shoulder**	**Complete Road Closure**
Monday to Friday	11:00AM to 3:00PM	12:00AM to 4:00AM	9:30AM to 3:00PM	12:00AM to 4:00AM
	9:30PM to 5:00AM		9:00PM to 5:00AM	
All lanes open at 12:00 noon on Friday				

WEEKEND	**Eastbound/Westbound**	
	Single-Lane Closures or Shoulder	**Complete Road Closure**
Friday to Saturday	10:00PM to 8:00AM	12:00AM to 5:00AM
Saturday to Sunday	11:00PM to 8:00AM	12:00AM to 5:00AM
Sunday to Monday	9:00PM to 5:00AM	12:00AM to 4:00AM

ORDER NO.: L89
CONTRACT ID. NO.: C000109813C01B

Single-Lane Closures* or Shoulder					
ARTERIAL	**WEEKDAY**		**WEEKEND**		
	Monday to Thursday	Friday	Friday to Saturday	Saturday to Sunday	Sunday to Monday
Major Arterials**	9:30AM to 3:00PM 10:00PM to 5:00AM	9:30AM to 2:00 PM	10:00PM to 9:00AM	10:00PM to 8:00AM	10:00PM to 5:00AM
All Other Roadways	9:00AM to 3:30PM 9:00PM to 5:00AM	9:00AM to 2:00 PM	10:00PM to 9:00AM	9:00PM to 9:00AM	10:00PM to 5:00AM

Multiple-Lane Closures					
ARTERIAL	**WEEKDAY**		**WEEKEND**		
	Monday to Thursday	Friday	Friday to Saturday	Saturday to Sunday	Sunday to Monday
Major Arterials**	10:00PM to 5:00AM	Not before 11:00PM	11:00PM to 5:00AM	11:00PM to 6:00AM	11:00PM to 5:00AM
All Other Roadways	9:00PM to 5:00AM	Not before 10:00PM	10:00PM to 6:00AM	10:00PM to 6:00AM	10:00PM to 5:00AM

*Single-lane closures only permitted for multiple-lane roadways.
**Major Arterials defined as Primary Roads, high volume Secondary Roads, and all other routes that connect directly to Interstates.

ORDER NO.: L89
CONTRACT ID. NO.: C000109813C01B

VIRGINIA DEPARTMENT OF TRANSPORTATION
SPECIAL PROVISION FOR

SECTION 412 - WIDENING REPAIRING, AND RECONSTRUCTING EXISTING STRUCTURES

January 23, 2017

Section 412.01 - Description is amended to include the following:

This work shall also consist of providing designing, installing, maintaining and removing protection temporary debris shield to protect I-66 from any falling objects.

412.03 - Procedures is amended to include the following:

The Contractor shall submit a proposed design and working drawings of the temporary debris shield to the Engineer before starting bridge construction. The temporary debris shield shall be designed by a Professional Engineer, holding a valid license to practice engineering in the Commonwealth of Virginia.

The temporary debris shield shall be designed in accordance with AASHTO Standard Specifications, AITC, ACI, local building code, UBC and other applicable codes, specifications and standards.

The temporary debris shield shall be able to withstand the impact of falling objects from the bridge work above, including the lagging, as well as any lateral wind loads.

412.04 – Measurement and Payment is amended to include the following:

Temporary Debris Shield will be paid for at the contract lump sum price. This price shall include designing, installing, maintaining, and removing the debris shield.

Payment will be made under:

Pay Item	Pay Unit
Temporary Debris Shield	Lump Sum

ORDER NO.: L89
CONTRACT ID. NO.: C000109813C01B

VIRGINIA DEPARTMENT OF TRANSPORTATION
SPECIAL PROVISION FOR

SECTION 502 – INCIDENTAL CONCRETE ITEMS

January 24, 2017

Section 502 – Incidental Concrete Items is amended as follows:

Section 502.01 - Description is amended to include the following:

This work also consists of installing concrete curbed planters on the west side of N. Lynn Street. Curb, C-3 Arlington Standard Header, Curb and Gutter, C-2 Arlington Standard, and Concrete Commercial Driveway Entrances Arlington Standard Detail R-2.4B shall be constructed to the Arlington County Standards as shown on the plans, in accordance with these specifications, and as directed by the Engineer.

Section 502.03 – Procedures is amended to include the following:

The Contractor shall remove and dispose of the existing granite pavers within the area of the proposed concrete curbed planters, excavate as necessary, and install reinforced cast-in-place concrete curbed planters.

Subbase material shall be compacted to 95% density in accordance with Section 308 of the Specifications.

Section 502.03 (a) is replaced with the following:

The Contractor shall construct forms of wood or metal conforming to Section 403.03 of the Specifications.

Before placing concrete, the Contractor shall check the line and grade for accuracy and fasten the face forms of the curb to the gutter forms. Spade the concrete and tamp sufficiently to bring the mortar to the surface, after which finish with a magnesium float. Construction shall be in sections of uniform lengths, providing transverse joints at approximately 10-feet intervals and when the time elapsing between placements exceeds 45 minutes. No section shall be less than 6 feet in length. Separate sections by plate steel templates set perpendicular to the grade and center line of the unit specified. The templates shall be 1/8-inch in thickness and shall have a width and depth equal to the unit cross-section. Leave these templates in place until the concrete has set sufficiently to hold its shape.

The Contractor shall form expansion joints at intervals of 100 feet or less. When the curb and gutter is constructed adjacent to rigid pavements, the location and width of expansion joints shall coincide with those in the pavement, where practicable. Where stationary structures, such as catch basins and drop inlets, are within the limits of the curb and gutter, place an expansion joint between the structure and the curb and gutter. Place expansion joints at all returns.

Screed the face and top of curb and surface of gutter smooth and round the edges to a radius as shown on the Arlington County Construction Standards.

As soon as the concrete has attained sufficient set, remove the face forms of the curb. The exposed surfaces shall be screeded with a straight edge and finished with a steel trowel. Remove all trowel marks with a brush wet with clear water. Do not use mortar in finishing.

The finished surface of curb and gutter shall be true to line and grade within the tolerances specified in Section 316.05 of the Specifications.

Section 502.03 (c) 1. last paragraph is amended to include the following:

The backfill shall be compacted to 95 percent density in accordance with the applicable of Section 303, Section 308, or Section 315 of the Specifications.

Section 502.04 – MEASUREMENT AND PAYMENT is amended to include the following:

Curb, C-3 Arlington Standard Header and Curb and Gutter, C-2 Arlington Standard will be measured and paid for in accordance with the first measurement and payment paragraph.

Concrete Curbed Planters will be measured in units of each and will be paid for at the contract unit price per each. This price shall include removing and disposing of existing granite pavers, excavating, forming, furnishing and installing reinforcing steel and concrete, finishing and curing.

Concrete Commercial Driveway Entrance 9" (**Arlington Standard)** will be measured in cubic yards and will be paid for at the contract price per cubic yard price. This price shall include excavating, preparing surface, furnishing and placing concrete, finishing, and curing.

Payment will be made under:

Pay Item	**Pay Unit**
Concrete Curbed Planters	Each
Concrete Commercial Driveway Entrance 9"	Cubic Yard

ORDER NO.: L89
CONTRACT ID. NO.: C000109813C01B

VIRGINIA DEPARTMENT OF TRANSPORTATION
SPECIAL PROVISION FOR

SECTION 504 – SIDEWALKS, STEPS, AND HANDRAILS

January 24, 2017

Section 504 – Sidewalks, Steps, and Handrail is amended as follows:

Section 504.01 - Description is amended to include the following:

This work shall also consist of removing the existing handrail on the Gateway Park wall and the wood curb and installing new metal handrail as shown on the plans, as specified herein, and as directed by the Engineer.

Section 504.02 – Materials is amended to include the following:

(j) **Gateway Park handrail** shall be aluminum, powder coated white, as shown on the plans.

Powder Coated Factory Finish shall comply with the following. Coating material for handrail shall be finished with a factory applied TGIC polyester powder coating of the "Super-Durable" class. Powder coated finish shall meet or exceed the following performance criteria. Applicable requirements to validate the coating process:

1. Adhesion Resistance: ASTM D3359, Measuring Adhesion by Tape Test, Method B. Minimum Performance Requirement – Coating retention of not less than 95%.

2. Impact Resistance: ASTM D2794, Resistance of Organic Coatings to the Effects of Rapid Deformation (Impact); Minimum Performance Requirement - resistance to impact not less than120 in. /lb.

3. Film Hardness: ASTM D3363, Film Hardness by Pencil Test; Minimum Performance Requirement – Minimum Hardness: 2H

4. Solar Concentration Exposure: ASTM D4141, Conducting Black Box and Solar Concentrating Exposures of Coatings, Method C. (Equivalent to EMMAQUA NTW); Minimum Performance Requirement - coating must test to a minimum of 50% Gloss Retention at 1,400 MJ/m2 with no film failure, chalking, cracking or checking and no more than 10% fading.

5. Thickness: Film thickness of 2-4 mils as measured by manufacturer's standard powder coat measurement and inspection procedures.

6. Pretreatment: The fence sheeting and framework shall be prepared using an 8 stage pre-treatment cleaning system to remove foreign material and to properly prepare the surface to achieve the powder coating system requirements specified above.

7. Curing: Heat cure in accordance with powder manufacturer's prescribed cure schedule to properly crosslink and bond finish to metal substrate.

8. Chemical Resistance/Corrosion Resistance:

9. Procedure: Preparation of Test Specimens - Perform a single scribe the length of the specimen, within one inch of any edge and deep enough to expose the base metal. Expose the specimen for 1,000 hours according to ASTM B117-07 using a 5% salt solution and 95ºF operational temperature. After exposure, remove specimens and wipe dry. Immediately apply tape (Permacel 99 or equal) over scribed are by pressing down firmly against the coating. Sharply pull the tape off at a right angle to the surface being tested.

10. Performance: The required is a minimum of seven on the scribed edge and minimum blister rating of eight within the test specimen field in accordance with tables in ASTM D1654.

Avoid unnecessary cutting, drilling and welding of pre-finished fence components. If necessary to cut drill, weld or otherwise modify product due to field conditions, repair factory finish as follows: Touch-up any necessary areas by lightly sanding; apply a zinc-rich cold galvanizing primer followed by a high quality acrylic lacquer paint to match finish.

The metal components of handrail shall be bonded to maintain continuity. Electrical grounding shall conform to Section 410.03(b) of the Specifications.

Working drawings shall be submitted in accordance with Section 407 of the Specifications.

Submit samples of each component demonstrating color and finish on handrail and accessories.

Section 504.03 – Procedures is amended to include the following:

The Contractor shall submit shop drawings and manufacturer assembly and installation instructions to the Engineer for approval before construction. The Contractor shall remove and dispose of the existing handrail as indicated on the plans. The Contractor shall install the new metal handrail as shown on the plans. Assemble and install in accordance with manufacturer's instructions.

Section 510.04 – Measurement and Payment is amended to include the following:

Handrail Metal will be measured in linear feet and will be paid for at the contract unit price per linear foot. This price shall include removing existing handrail, removing wood curb, furnishing, powder coating, and installing.

Payment will be made under:

Pay Item	**Pay Unit**
Handrail Metal	Linear Foot

ORDER NO.: L89
CONTRACT ID. NO.: C000109813C01B

VIRGINIA DEPARTMENT OF TRANSPORTATION
SPECIAL PROVISION FOR

SECTION 505 - GUARDRAIL AND W-BEAM MEDIAN BARRIERS

January 23, 2017

Section 505 - Guardrail and W-Beam Median Barrier is amended as follows:

Section 505.01 - Description

This work shall include connecting the proposed guardrail to existing guardrail.

Section 505.02 - Materials is amended to include the following:

(f) Metal beam rail shall be corrosion resistant weathering steel W-beam or thrie beam rail conforming to AASHTO M 180, Type IV, Class B and to AASHTO-AGC-ARTBA, *A Guide to Standardized Highway Barrier Hardware*.

(g) Guardrail Posts shall be of the appropriate size and shape according to ASTM A6 and conform to AASHTO-AGC-ARTBA, *A Guide to Standardized Highway Barrier Hardware*. Galvanize the portion of weathering steel posts to be embedded in accordance with Section 233 of the Specifications.

(h) Weathering nuts and bolts shall conform to ASTM A563, Grade C3 and to ASTM A325, Type 3.

Section 505.04 – Measure and Payment is amended to include the following:

Guardrail (Standard), Weathering Steel will be measured and paid for in accordance with the first paragraph.

Guardrail Terminal (GR-9) will be measured and paid for in accordance with the fifth paragraph.

ORDER NO.: L89
CONTRACT ID. NO.: C000109813C01B

VIRGINIA DEPARTMENT OF TRANSPORTATION
SPECIAL PROVISION FOR

SECTION 510 - RELOCATING OR MODIFYING EXISTING ITEMS

March 27, 2017

SECTION 510 - RELOCATING OR MODIFYING EXISTING ITEMS is amended as follows:

Section 510.01 - Description is amended to include the following:

This work shall consist of removing and disposing of two segments of existing concrete median barrier, adjusting existing fence; removing and disposing of existing underground conduit, storm sewer pipe, and foundations, removing and either salvaging or disposing of existing controller and cabinet, signal heads (3-Section), mast arms, mast arm poles, streetlight poles, luminaires, junction boxes, and Type I sign; relocating existing Dynamic Messaging Sign (DMS) cabinet, equipment, and VDOT fiber optic splice to a new cabinet; relocating existing signs, relocating the existing Eco-Totem Bike Counter and conduit, relocating existing fiber optic cable, relocating existing CCTV camera and equipment, and adjusting existing Arlington County fiber optic manholes to finished grade as shown in the plans, in accordance with the specifications, and as directed by the Engineer.

Section 510.02 – Materials is amended to include the following:

Hydraulic Cement Concrete shall conform to Section 217 of the Specifications.

Hydraulic Cement Mortar and Grout shall conform to Section 218 of the Specifications.

Aggregate Material shall conform to Section 501 of the Specifications.

Section 510.03 – Procedures is amended to include the following:

The Contractor shall remove and dispose of two segments of existing concrete median barrier and adjust existing fence by removing the fence mounted on the median barrier, coring the remaining barrier, and installing end post and bracing and reattaching the fence as shown on the plans.

The Contractor shall remove and dispose of existing underground conduit and backfill trenches in accordance with Section 303 of the Specifications.

The Contractor shall remove and dispose of existing storm sewer pipe and backfill trenches in accordance with Section 303 of the Specifications.

The Contractor shall coordinate the DMS Control cabinet work with the Engineer and Arlington County. The Contactor shall determine if existing slack in the fiber optic line is adequate to place the new cabinet at the location suggested in the plans. If the slack is not adequate, the cabinet can be located on the west side of the existing DMS sign. The exact location shall be coordinated with the Engineer. The Contractor shall furnish and install a new foundation/base and cabinet with power rack, relocate existing VDOT fiber optic splice, relocate and reconnect existing DMS equipment, and connect power via existing handhole as indicated on the plans. The work shall conform to the applicable provisions in Sections 700, 703, 801, and 808 of the Specifications.

The Contractor shall coordinate ITS DMS control cabinet work with structural work. Use existing fiber optic splice to allow VDOT fiber optic line to pass through or be rerouted around proposed retaining wall. The Contractor shall protect and maintain the existing fiber optic line during construction. The Contractor shall submit the proposed method for the cabinet relocation and rerouting the fiber optic line for review and approval by the Engineer before starting work. The Contractor shall notify the Engineer at least four weeks before commencing work

Any damage to the ITS DMS control equipment or fiber optic lines due to the Contractors operations shall be repaired or replaced by Contractor at no additional cost to the Department.

The Contractor shall remove and store the existing Gateway Park sign until such time that the sign can be placed in its new location then install the sign. The exact location for the placement of the sign shall be determined by coordination with the Engineer and Arlington County Parks and Recreation. The Contactor shall coordinate the relocation of the sign with the Engineer and Arlington County Parks and Recreation.

The Contractor shall construct a new foundation/base at the new location. The dimensions and style of the foundation/base shall match the existing foundation/base. The Contractor shall submit shop drawings of the foundation/base to the Engineer for approval before construction.

Any damage to the sign due to the Contractors operations shall be repaired or replaced by Contractor at no cost to the sign owner or the Department.

The Contractor shall notify the Engineer at least three weeks before starting Eco-Totem Bike Counter relocation work. The Engineer will coordinate with Arlington County DES/DOT Planning (David Patton 703-228-3633) at least two weeks before the work may start. The concrete pad, Eco-Totem installation, power connection and inductive loop installation shall be in accordance with manufacturer's recommendations (Eco-Counter Canada/North America 1-866-518-4404).

The Contractor shall remove and store the existing bike counter, including all incidentals shall be until such time that the bike counter can be installed in its new location. The exact location for the placement of the bike counter shall be coordinated with the Engineer and Arlington County DES/DOT Planning.

The Contractor shall construct the new foundation/base at the new location. The dimensions of the foundation/base shall the same dimensions and finish as the existing foundation/base shown on the plans. The bike counter shall be connected to a dedicated power meter as shown on the plans. The power supply will be provided by Dominion Virginia Power. The Contractor shall submit shop drawings and manufacturer's recommendations for the foundation/base, inductive loops, and cable/conduit locations and details to the Engineer for approval before construction.

Any damage to the bike counter due to the Contractors operations shall be repaired or replaced by Contractor at no cost to the County.

The Contractor shall relocate existing fiber optic cable only after approved by the Engineer. Relocation work shall conform to Section 808 of the Specifications and Section 6: Signal Communications Cable and Conduit of the Arlington County Department of Environmental Services Traffic Signal & Streetlight Specifications.

The Contractor shall adjust existing Arlington County fiber optic manholes to finished grade.

STREET	APPROXIMATE LOCATION	
WB LEE HYWY	STATION 601+26.44	27' LT
WB LEE HYWY	STATION 605+21.61	23.3' LT
WB LEE HYWY	STATION 606+13.71	17.34' LT
WB LEE HYWY	STATION 609+76.22	18.97' LT
WB LEE HYWY	STATION 611+24.13	19.57' LT
WB LEE HYWY	STATION 614+41.62	29.6' LT
N. LYNN ST.	STATION 106+16.32	74' RT

The Contractor shall coordinate the adjustment of the Arlington County fiber optic manholes with the Engineer. The Contractor shall notify the Engineer at least 7 days in advance of the planned adjustment date. The Engineer will contact Arlington County to arrange for a representative to be on site during the adjustments. No adjustments shall be made without an Arlington County representative on site.

The Contractor shall remove and dispose of existing foundations entirely or to a minimum of 2 feet below grade or as required for installation of the new pole or controller cabinet. Streetlight foundations are typically 4 to 6 feet deep, with majority being 4 feet. Removal shall include breaking out concrete and removing anchor bolts, conduits, cable, and reinforcing steel, if any. Light pole The Contractor shall backfill the resulting hole in accordance with Section 303 of the Specifications and restore the surface. Restoration shall include, but is not limited to, concrete work, asphalt repair, pavers, and sod.

The Contractor shall remove and either salvage or dispose of existing signal controllers and cabinets as directed by the Engineer.

The Contractor shall remove and either salvage or dispose of existing mast arms as directed by the Engineer.

The Contractor shall remove and either salvage or dispose of existing mast arm poles as directed by the Engineer.

The Contractor shall remove and either salvage or dispose of existing signal heads as directed by the Engineer.

The Contractor shall remove and either salvage or dispose of street light poles as directed by the Engineer.

The Contractor shall remove and either salvage or dispose of existing luminaires as directed by the Engineer.

The Contractor shall remove and dispose of existing junction boxes as directed by the Engineer.

Salvaged materials and equipment shall be delivered to Arlington County in accordance with the Special Provision for Traffic Signal Installation.

The Contractor shall relocate existing CCTV camera and equipment. This shall include removing, storing, transporting, and installing camera, cables, and controller and connecting the same in the new location.

The Contractor shall remove and dispose of existing underground conduit.

Section 510.04 – Measurement and Payment is amended to include the following:

Remove Existing Barrier will be measured in linear feet and will be paid for at the contract unit price per linear foot. This price shall include removing and disposing of two segments of existing concrete median barrier.

Adjust Existing Fence will be measured in linear feet and will be paid for at the contract unit price per linear foot. This price shall include removing and disposing of the fence mounted on the median barrier, coring the remaining barrier, and installing end post and bracing and reattaching the fence.

Remove Existing Underground Conduit will be measured in linear feet and will be paid for at the contract unit price per linear foot. This price shall include removing and disposing of conduit and backfilling trench.

Remove Existing Storm Sewer Pipe will be measured in linear feet and will be paid for at the contract unit price per linear foot. This price shall include removing and disposing of pipe and backfilling trench.

Relocate Existing DMS Cabinet will be paid for at the contract lump sum price. This price shall include removing and disposing of the existing ITS Dynamic Messaging Sign (DMS) cabinet; furnishing and installing new foundation/base and cabinet with power and equipment racks; and relocating the existing DMS equipment and VDOT fiber optic splice to the new cabinet, and completing conduit/cable connections to the new cabinet.

Relocate Existing Gateway Park Sign will be measured in units of each and will be paid for at the contract unit price per each. This price shall include removing, transporting, storing, and install the sign at the new location. The price shall also include constructing a new foundation/base.

Relocate Existing Bike Counter will be paid for at the contract lump sum price. This price shall include removing, storing, furnishing and installing foundation/base, conduit, inductive loop detector, and power, loop detector, and communication cables; installing bike counter, and completing equipment connections.

Relocate Existing Fiber Optic Cable will be measured in linear feet and will be paid for at the contract unit price per linear foot. This price shall include disconnecting splices and connections, removing the existing fiber optic cable, storing, installing the cable in new conduit, and connecting and splicing.

Adjust Existing Manhole will be measured in units of each and will be paid for at the contract unit price per each. This price shall include furnishing and installing risers, mortar and grout as needed to bring the manhole frame and cover to the finished grade and super elevation.

Remove Existing Foundation will be measured in units of each and will be paid for at the contract unit price per each. This price shall include removing and disposing of foundation, furnishing, installing, and compacting backfill; and restoring site.

Remove Existing Controller will be measured in units of each and will be paid for at the contract unit price per each. This price shall include removing and either salvaging or disposing of controller and controller cabinet.

Remove Existing Mast Arm will be measured in units of each and will be paid for at the contract unit price per each. This price shall include removing and either salvaging or disposing of mast arm.

Remove Existing Mast Arm Pole will be measured in units of each and will be paid for at the contract unit price per each. This price shall include removing and either salvaging or disposing of mast arm pole.

Remove Existing Signal Head (3-Section) will be measured in units of each and will be paid for at the contract unit price per each. This price shall include removing and either salvaging or disposing of signal heads and preemption detectors. The price shall also include removing and disposing of existing cables.

Remove Existing Bike Signal Head (3-Section) will be measured in units of each and will be paid for at the contract unit price per each. This price shall include removing and either salvaging or disposing of signal heads. The price shall also include removing and disposing of existing cables.

Remove Existing Street Light Poles will be measured in units of each and will be paid for at the contract unit price per each. This price shall include removing and either salvaging or disposing of street light poles. The price shall also include removing and disposing of existing cables.

Remove Existing Luminaires will be measured in units of each and will be paid for at the contract unit price per each. This price shall include removing and either salvaging or disposing of luminaire. The price shall also include removing and disposing of existing cables.

Remove existing junction box will be measured in units of each and will be paid for at the contract unit price per each. This price shall include removing and disposing of the junction box, capping or removing conduits, and furnishing fill, backfilling and compacting, and restoring site. The price shall also include restoring disturbed grass, pavers, concrete, asphalt, or other areas.

Remove Existing Type I Sign will be measured in units of each and will be paid for at the contract unit price per each. This price shall include removing and disposing of existing sign post and sign panel.

Relocate Existing CCTV Camera and Equipment will be measured in units of each and will be paid for at the contract unit price per each. This price shall include removing and either salvaging or disposing of signal heads and preemption detectors. The price shall also include removing and disposing of existing cables.

When removing existing cable is not a bid item, the cost of removing and disposing of existing cable and cutting, capping, and abandoning underground conduit shall be included in the contract unit prices of other appropriate work items.

Payment will be made under:

Pay Item	**Pay Unit**
Remove Existing Barrier	Linear Foot
Adjust Existing Fence	Linear Foot
Remove Existing Underground Conduit	Linear Foot
Remove Existing Storm Sewer Pipe	Linear Foot
Relocate Existing DMS Cabinet	Lump Sum
Relocate Existing Gateway Park Sign	Each
Relocate Existing Bike Counter	Lump Sum
Relocate Existing Fiber Optic Cable	Linear Foot
Adjust Existing Manhole	Each
Remove Existing Foundation	Each
Remove Existing Controller & Cabinet	Each
Remove Existing Mast Arm	Each
Remove Existing Mast Arm Pole	Each
Remove Existing Signal Head (3-Section)	Each
Remove Existing Bike Signal Head (3-Section)	Each
Remove Existing Street Light Pole	Each
Remove Existing Luminaire	Each
Remove existing junction box	Each
Remove Existing Type I Sign	Each
Relocate Existing CCTV Camera & Equipment	Each

ORDER NO.: L89
CONTRACT ID. NO.: C000109813C01B

VIRGINIA DEPARTMENT OF TRANSPORTATION
SPECIAL PROVISION FOR

SECTION 517 - CONTRACTOR CONSTRUCTION SURVEYING

February 3, 2017

Section 517 Contractor Construction Surveying is amended as follows:

Section 517.01 - Description is amended to include the following:

The work shall also include preparing and submitting as-built drawings in accordance with these specifications.

Section 517.02 – General Requirements is amended to include the following:

As-Built Drawings

The Contractor shall prepare and submit as-built drawings that encompass the entire project area. As-built drawings shall be submitted in hard copy paper form and electronic AutoCAD drawing files.

The as-built drawings shall provide a post construction topographic field survey of the project area that meets industry standards for civil engineering design. Arlington County will provide the Contractor with applicable AutoCAD files containing property information and survey control for establishing the field survey to be performed.

1. General As-Built Requirements

- All as-builts for projects are required to be on bond paper, at least 24” x 36”, and shall bear the name, address, and telephone number of the firm preparing the drawing and the date the as-built data is added to the original via the revision block. Electronic AutoCAD drawing files, based on the County project datum, are also required.
- Surveyor’s statement (with embossed or wet seal and with an original signature on each sheet) shall verify that as-built drawings reflect the true field conditions.
- “AS-BUILT DRAWING” or “RECORD DRAWING” shall be clearly labeled on each sheet.
- Street names shall be on all streets. All easements and right-of-ways shall be shown and clearly labeled.
- The location and elevation of benchmarks referenced shall be shown on the drawing. If the referenced benchmark is not within the project area, then a complete description of its location will be provided.
- The locations and description of any utility lines and other installations of any kind or other description known to exist within the construction area.
- The locations and dimensions of any changes to buildings and structures.
- Correct grade and alignment of roads.
- Correct elevations to changes made in site grading.
- Changes in details of design or additional information such as approved placement details, pipe sizes, material changes, etc.
- All horizontal distances shall be shown to the nearest tenth of a foot. All vertical distances shall be shown to the nearest tenth of a foot.

2. <u>Electrical and Communication Lines</u>

- Locate and clearly label all conduit runs, fittings, splice vaults, pull boxes, meter pedestals, light bases, transformer or switch gear pads, poles and other appurtenances.
- Show all sizes and material types of pipes and conduits.
- Show location and elevations on pipes and fittings where changes or deflections in direction occur.

- Special detail drawings may be required where installations are not shown on approved construction drawings for whatever reason or where required for clarity.

3. Water System As-Built Requirements

- Locate valves, fittings, services, and fire hydrants.
- Show all sizes and types of valves and pipes.
- Special detail drawings may be required where installations are not shown on approved construction drawings for whatever reason or where required for clarity.
- Show location and elevations on pipes and fittings where changes in direction occur.

4. Sanitary Sewer System As-Built Requirements

- Show all piping, wyes, tees, valves, manholes and special cases.
- Identify runs of gravity mains (i.e., 300.4 feet of 8” PVC SDR 35 at 0.4%).
- Elevations shall be given for the top of all manhole covers and for all inverts.
- Service laterals are to be identified with location of end service or plug (station and offset measured upstream).
- Manholes shall be identified by type.

5. Drainage System As-Built Requirements

- Provide elevations for all drainage structures, top, invert, bottom, etc.
- Identify size, material, and slope of all piping.
- Provide spot elevations and cross sectional information, as well as slope, on all ditches, canals, etc. Provide as-built storage volume of detention/retention basins or structures.
- Spot elevation on top of bank to confirm minimum design bank elevation.
- Elevation of water stage at date of as-built.
- Elevation of top of control structure, throat, faces, or under drain.
- Location of top of bank and existing water edges at time and date of taking elevations.

6. Streets, Sidewalks And Trails Systems As-Built Requirements

- Locate edges of pavement and grade breaks.
- Locate and describe all installed regulatory or warning signage and pavement markings within the project.
- Location, diameter, and species information on installed street trees.
- Locate irrigation lines, controllers, sprinkler heads, backflow devices, pressure reducing valves, meters, supply sources and tap locations.
- Location, type, material and reinforcement, height, drainage systems and foundation information of all retaining walls.
- Note curb & gutter, sidewalk, pavers or any other surface improvement.
- Locate all other applicable surface features within the street/project area.

Section 517.07 – Measurement and Payment is amended to include the following:

The final 20 percent of the Construction Surveying contract unit price will not be paid until the Contractor provides the Engineer as-built drawings as detailed herein.

ORDER NO.: L89
CONTRACT ID. NO.: C000109813C01B

VIRGINIA DEPARTMENT OF TRANSPORTATION
SPECIAL PROVISION FOR

ARLINGTON COUNTY WATER MAINS & APPURTENANCES

March 14, 2017

PART 1 - GENERAL

1.1 Description of Work

This work shall consist of furnishing and installing water pipe and appurtenances as shown on the plans, in accordance with these specifications and as directed by the Engineer.

1.2 Applicable Codes, Standards, and Specifications

A. American National Standards Institute (ANSI)
B. American Society for Testing and Materials (ASTM)
C. American Water Works Association (AWWA)
D. National Fire Protection Association (NFPA)
E. Arlington County Fire Protection Code (Chapter 8 of the Arlington County Code)
F. Arlington County Plumbing Code (Chapter 18 of the Arlington County Code)
G. Arlington County Utilities Code (Chapter 26 of the Arlington County Code)
H. Plumbing Code adopted by the State of Virginia

1.3 Applicable References

A. Erosion and Sediment Control Ordinance (Chapter 57 of the Arlington County Code)
B. Virginia Department of Health (VDH) Waterworks Regulations (12 VAC 5-590)

1.4 Submittals

Submit full descriptions and details of all pipe, valves, hydrants, and other appurtenances proposed for the project in accordance with Arlington County Construction Standards and Specifications Section 01300 Submittals.

1.5 Quality Assurance

A. The manufacturer shall provide facilities or a certified laboratory for conducting load bearing and other tests required by the referenced specifications.

B. The Engineer will inspect pipe, fittings and joint material upon delivery to the site. The Contractor shall provide ample space between rows of stockpiled pipe to facilitate adequate inspections.

PART 2 - MATERIALS

2.1 General

A. All materials shall be suitable for 150 pounds per square inch (psi) working pressure unless otherwise indicated.

B. Pipe of the same size and material shall be furnished by the same manufacturer. Each pipe length and fitting shall be clearly marked with the manufacturer's name, trademark and class of pipe.

C. Materials shall be recently manufactured and unused. Only previously approved manufacturers items may be furnished.

2.2 Iron Pipe

A. Iron pipe shall be ductile iron conforming to AWWA C151 (ANSI A21.51), class 53 minimum for 6-inch pipe and class 52 minimum for 8-inch and larger pipe. Pipe shall be single cement lined conforming to AWWA C104 (ANSI A21.4) and shall have mechanical or push-on joints utilizing rubber gasket rings, conforming to AWWA C111 (ANSI A21.11). Coatings shall be bituminous 1.0 mil. thick.

B. Fittings shall be mechanical joint ductile iron conforming to AWWA C110 (ANSI A21.10), with a minimum pressure rating of 250 psi, or ductile iron compact grade conforming to AWWA C-153 (ANSI 21.53) with a minimum pressure rating of 350 psi. Fittings shall be cement lined conforming to ANSI A21.4.

C. Polyethylene encasement with a minimum thickness of 8-mils shall be applied to all underground ductile pipe installations and shall comply with the installation and material requirements of AWWA C-105 and ANSI A21.5. All pipes, fittings, valves, hydrants and branch connections shall be encased as shown on approved plans. All holes and openings of any size shall be repaired in accordance with the manufacturer's recommendations.

2.3 Tie Rods and Accessories for Anchorage and Mechanical Joint Restraints

A. Tie rods, tie bolts and accessories shall be manufactured of corrosion resistant steel, ASTM-A242, Super Star series of Star National Products, Romac Industries, Smith Blair, or approved equal.

B. Mechanical joint restraints shall be used with all water main appurtenances as directed or as approved by the engineer. Mechanical joint restraint shall be incorporated in the design of the follower gland and shall include a restraining mechanism which, when actuated imparts multiple wedging action against the pipe, increasing its resistance as the pressure increases. Restraining devices shall be manufactured of ductile iron. Torque limiting twist off nuts shall be used to insure proper installation of the restraining device. The minimum working pressure shall be at least 250 psi and shall be manufactured by EBAA iron, Inc., Romac Industries, Smith Blair, or approved equal.

2.4 Gate Valves

A. Gate valves, 4-inch through 12-inch, for buried installation shall be ductile or grey cast iron, resilient wedge type, O-ring sealed, non-rising stem, fitted with a 2-inch operating nut opening left, with mechanical joint and/or flanged ends, as indicated on the drawings. Valves shall conform to AWWA C-509 (grey iron) or C-515 (ductile iron) requirements. Provide buried valves with valve boxes. Provide extension stems extended within two feet of finished grade if required for valve depth. Valves shall be American Flow Control Series 2500-1, Mueller A-22360, U.S. Pipe USPO valve, Kennedy KS, or approved equal.

B. Gate valves 14" and larger shall be iron body with fusion epoxy coating conforming to AWWA C 550 bronze mounted, double disc, resilient wedge, O-ring sealed, non-rising stem, fitted with a 2" operating nut opening left, with mechanical joint and/or flanged ends as indicated on the drawings. 14" gate valves may be installed in vaults or buried with valve boxes and extension stems placed within two feet of finished grade if required for valve depth. Gate valves 16" and larger shall be installed in vaults with or without NRS bypass valve as indicated on the drawings. Valves shall conform to AWWA C-500 requirements and shall be Mueller Co. 2360 series or from US Pipe USPO, or American Flow Control Series, or approved equal.

C. Gate valves 3" to 8" for water meter and/or fire line vault or interior installation shall be iron body, bronze mounted, resilient wedge, bolted bonnet, 250 psig maximum working pressure class 125 psi, outside screw and yoke, rising stem with hand wheel, opening left, with flanged ends. Valves shall be Mueller Co. 2360 series, US Pipe USPO, or American Flow Control Series, or approved equal.

D. Gate valves 2" and smaller shall be bronze body, solid disc, union bonnet, class 150 psi minimum, non-rising stem with hand wheel, opening left, with inside threaded ends. Valves shall be Stockham Model B-128, Crane Model No. 426, or from Mueller Co or US Pipe USPO, or approved equal.

2.5 Butterfly Valves, Check Valves and Cone Valves

Butterfly, check, and cone valves shall be as directed by the Engineer on a special project basis.

2.6 Fire Hydrants

A. Fire hydrants shall be dry top, dry barrel compression type, with a valve opening of 5-1/4inches, double 0-ring seals and safety flange, and shall conform to AWWA C502 requirements.

B. Hydrants shall be provided with two 2-1/2 inch hose outlets and one 4-inch pumper outlet with threading conforming to NFPA No. Standard 1963, *Standard for Fire Hose Connections*, requirements for American National Fire Hose Connection Screw Threads (NH), 6-inch mechanical joint inlet connection, National Standard 1-1/2 inch pentagon operating nut and outlet cap nuts, chains on outlet caps, and harnessed lugs. Hydrants shall open left and counterclockwise. Fire hydrants shall be painted with an exterior type industrial coating enamel. The upper barrel including bonnet and hose nozzle caps shall be painted "National Standard Yellow". Hydrants shall be Mueller Super Centurion 250, Kenndey “Guardian”, Clow “Medallion”, or approved equal.

2.7 Valve Boxes

Valve boxes shall be of the two-piece, sliding type 5-1/4-inch shaft, cast iron kind. Valve box shall read “Water” Valve boxes shall be as manufactured by Bingham and Taylor Company, Capitol Foundry, or Tyler Company and conform to their standard dimensions.

2.8 Copper Pipe

Copper pipe shall be seamless water tube, AWWA type K conforming to ASTM designation B88 requirements. Fittings shall be underground copper service flared type.

2.9 Water Meters and Services by Arlington County

Water meters, including taps, pipe fittings, meter box and accessories from the water main through the meter, will normally be furnished and installed by the Arlington County Department of Environmental Services (DES) after payment of the appropriate fee. The connection from the back side of the meter installation to the building shall be installed by the owner's plumber.

2.10 Water Meters and Services by Contractor

A. The Department of Environmental Services shall approve all water meter locations. Water meters shall be located in the utility strip or just behind the curb within public right-of-way or recorded easements and a minimum of 5 feet horizontally clear from other utilities, structures, or trees.

B. The Contractor shall assume complete responsibility for the installation, adjustments and any damage that may occur until final acceptance of the project.

C. New water mains shall pass all acceptance testing procedures before installing water service connections.

D. All services shall be installed by wet tap only. Service taps shall be located at the 10:00 and 2:00 position on the water main. Maintain a minimum of 12 inches between taps. Direct taps are allowed for 3/4 inch and 1 inch connections. Use approved saddles for 1-1/2 inch and 2 inch connections.

E. Water service lines shall have a minimum of three feet of cover and shall be approved by the Engineer, from the main to the meter before backfilling. Meter settings for 1-inch to 2 inch services shall be a minimum of 18-inches and a maximum of 24-inches below the meter box cover. Meter box covers shall be painted black with an exterior type of rust resistant enamel.

F. Meter boxes, meter box covers, corporation stops, angle valves, yoke ells, yoke bars, and all other appurtenances (except the water meter) necessary for a complete installation shall be provided in accordance with the approved plans, specifications, and DES requirements. Meter box covers shall be furnished by Bingham and Taylor, Capitol Foundry, Ford Meter Box Co. or approved equal.

2.11 Air Release Valves

Air release valves shall be constructed of cast iron body and cover conforming to ASTM A126.GR.B requirements. The float shall be stainless steel conforming to ASTM A240 requirements. Air release valves shall be manufactured by Apco, Crispin, Cla-val, Flomatic, or approved equal.

2.12 Tapping Sleeves and Valves

Tapping sleeves and valves shall conform to the applicable specifications herein for installation on the existing type of pipe described below.

A. Iron Pipe: The tapping sleeve shall have an iron body, mechanical joint, with gaskets, suitable for installation on the existing iron pipe. The tapping sleeve shall be as manufactured by Mueller Company No. H-615, JCM, Ford, or approved equal. Tapping valves shall conform to the applicable requirements specified herein for gate valves. All stainless steel tapping sleeves shall be type 304 stainless steel with stainless steel flange and full circumferential seal as manufactured by JCM style 432 and Ford style FAST, Smith Blair #663, or approved equal.

B. Concrete Pipe: The tapping sleeve shall be in accordance with AWWA Manual M-9. The sleeves shall have a separate gland which permits installation of the sleeve prior to the cutting of the prestress wires. The gland shall have a fusion epoxy coated (per AWWA C-213-79) waterway, and a broad gasket set in a retaining groove of a draw flange to eliminate flexing. The gland shall be equipped with load bearing set screws to protect the cylinder. Sleeves shall be furnished with grouting seals and grout horns to facilitate filling the space between the sleeve and the pipe.

2.13 Inserting Valves

Inserting valves shall be EZ Valve as manufactured by Advanced Valve Technologies, LLC, Team Industries, InsertValve™ or approved equal.

2.14 Service Clamps

Service clamps shall have cadmium zinc plated be double steel straps and ductile iron body with corporation stop thread of appropriate size, neoprene gasket cemented in place, cadmium zinc plated nuts and straps and shall be the diameter required. Clamps shall be as manufactured by Ford, Mueller, Romac Industries, Smith Blair, JCM Industries or approved equal.

2.15 Manhole Frames and Covers

1. Manhole frames and covers shall conform to Section 302 of the Specifications, or as specified on the plans.

2. Manhole frames and covers shall be constructed of gray or ductile iron conforming to ASTM A48 and A536.

3. Frames and covers shall have machined bearing surfaces to prevent rocking and rattling under traffic.

4. Manhole covers shall be as shown on the Arlington County DES Section W Water Main Standard Details and as indicated on the Contract Drawings. Frames and covers shall be manufactured by Americast/Concrete Pipe, Oldcastle, Dewey Brothers, or equal.

2.16 Manhole Steps

Manhole steps shall be a composite of a No. 3 grade 60 deformed steel bar encased in a copolymer polypropylene plastic of the “press-fit” design or rubber conforming to Section 302 of the Specifications and Arlington County DES Standard Detail Drawing M-2.0.

PART 3 - EXECUTION

3.1 Water Main Installation

Water mains shall be installed to conform to Arlington County Standards and Specifications, the Virginia Department of Health Waterworks Regulations, American Water Works Association Standards and Sections 302,303, & 520 of the Specifications:

3.2 Fire Protection Requirements

Fire Hydrants

1. Fire hydrants shall be located behind the curb line in accessible areas. Maximum spacing shall be 500 feet in residential areas and 300 feet in commercial and high density areas.

2. Building siamese fire line connections shall be located within 75 feet of fire hydrants or as approved by the Arlington County DCPHD - Inspection Services Division.

3. Actual fire hydrant locations are subject to approval by the Arlington County Fire Marshal and DES.

4. Fire hydrants shall not be installed on lines less than 8 inches in diameter or on lines not adequately sized to carry fire flows. Installation of fire hydrants on 6 inch water mains may be approved in special case determined by DES.

5. Connect hydrants to the water main with a minimum 6-inch ductile iron branch controlled by an independent gate valve. Hydrants shall stand vertically plumb with the center of the 4-inch pumper nozzle a minimum of 18 inches above the top of curb on streets with curb and gutter or a minimum of 18 inches above the elevation of the edge of the shoulder on streets without curb and gutter. Provide vertical offsets or bends as required to set hydrants at proper grade. The maximum bury depth shall be 6 feet.

6. No plantings or erection of other obstructions shall be made within 5 feet of any fire hydrant.

7. All hydrants, fire line valves and fittings shall be strapped or thrust blocked as approved by DES (refer to Standard Drawing W-7.0).

8. Drainage fill shall be provided to prevent the ponding of water around hydrants.

9. Fire hydrants shall be installed five feet from the point of curvature of curb returns or at the property line between properties in subdivisions or other areas where fire hydrants are installed between intersections.

10. Fire hydrants shall be drained to dry wells provided exclusively for this purpose.

11. Fire hydrants shall not be located in areas subject to high groundwater, flooding, contaminant or pollutant spills, or in areas where surface water ponds. If there exist no alternative location, weep holes on the hydrant shall be plugged and the hydrant shall be marked for seasonal dewatering or the weep hole drainage shall be piped to daylight with the pipe end screened.

12. Fire hydrants shall be placed so that the top operating nut is a minimum of 18 inches and a maximum of 2 feet back from the face of curb unless otherwise directed by the Arlington County Fire Marshal or DES.

13. Fire hydrants shall be installed within recorded easements on private property when locations in public right of way are not possible.

3.3 Minimum Requirement for As-Built Plan

The Contractor shall submit to the Engineer for transmittal to Arlington County DES, a set of mylar tracings and CD indicating the as-built conditions before water mains and appurtenances will be accepted. Such submittals shall be made before submitting the request for the monthly progress estimate payment that follows completing the water main and appurtenance work. The As-Built record drawings shall include the following:

i) Changes in valve and fire hydrant locations.

ii) Horizontal line changes and/or location of water main appurtenances changes.

iii) Any changes in water main profiles greater than 6-inches.

iv) Actual materials, limits of mechanical joint restraints and location of reaction blocking used on the project.

v) Water main to meter distances and locations of all water service meters and water service lines.

vi) Show actual location, depth or elevation, type and size of all utility crossings.

vii) Provide a minimum of two (2) swing ties to all valve boxes and permanent blow offs from fixed permanent objects visible above snow cover such as fire hydrants, utility poles or building corners. Swing ties shall cross as near to ninety degrees as practical for each valve box and blow off located.

viii) Statement from the Contractor that the As-Built construction record drawings are in substantial conformance with the associated design drawings unless otherwise noted on the as-built plans.

3.4 Construction Standards

A. Laying Pipe

1. Use proper and suitable tools for the safe handling and laying of pipes and fittings. Prevent fitting linings and coatings from being damaged; damaged pipe shall be replaced or repaired to the satisfaction of the Engineer.

2. Unless indicated otherwise, the depth of trench shall be sufficient to provide a minimum cover over the top of the pipe of 4.0 feet from the existing or proposed ground surface and to avoid interference of the pipeline with other utilities. Install pipe on continuous grades, as indicated on plans, to avoid sags or crests in the line.

3. Cutting pipes for inserting valves, fittings, or closure pieces shall be done in a neat and workmanlike manner, without damage to the pipe, so as to leave a smooth end at right angles to the axis of the pipe. Outside edge of cut pipe shall be beveled and smoothed to avoid damage to the gasket. Avoid damage to the lining. Do not flame cut cast iron pipe with oxyacetylene torch.

4. Thoroughly clean pipes and fittings before they are laid.

5. Carefully lower pipe fittings into trench. Butt ends of pipe against each other in such a manner that there shall be no shoulder or unevenness on the inside of the pipe.

6. Ensure that pipe is well bedded on a solid foundation as shown in the standard details. Correct any defects due to settlement. Excavate bell holes sufficiently large to ensure making proper joints. Exercise precautions to include the furnishing and placing aggregate to prevent any pipe from resting directly on rock. Rock found in trench shall be removed to provide a clearance of at least six inches below and on each side of all pipe, valves and fittings and shall be replaced with select fill.

7. Iron pipe shall be jointed in full accordance with AWWA Standard C600, the manufacturer's recommendations and the following requirements:

a. Push-on joints shall be thoroughly cleaned. Brush-coat gasket retaining groove with approved gasket lubricant and insert the rubber gasket in the bell socket. Apply a thin film of approved gasket lubricant to the exposed gasket surface. Clean and center the spigot end of the pipe into the socket complete the joint by forcing the spigot end to the bottom of the socket.

b. Mechanical joints shall be thoroughly cleaned. Lubricate the gasket and spigot. Place the gland on the spigot end, followed by the gasket, and the pipe end seated and centered in the socket. The gasket shall then be seated in the sockets, gland moved into position and bolts and nuts loosely assembled by hand. Tighten with a wrench.

8. At the close of work each day, close end of the pipeline with an expansion stopper so that no dirt or other foreign substance may enter the line. Keep this stopper in place until pipe laying is resumed.

9. Remove and replace all defective materials at no additional cost to the Department.

B. Connections to Existing Mains

1. Notify the Engineer three (3) working days before scheduling work on existing water mains (notify Engineer the Wednesday before proposed Monday work). No connections shall be scheduled for the day before weekends and holidays. Connect new water mains to the existing mains as shown on the drawings. Verify the location, type of pipe, and size of the existing main well in advance of any work on the connection. The Contractor shall give the Engineer at least seven (7) days notice of the need to shut down existing water mains so that the Engineer can notify DES and DES may give advanced notice to the affected customers. Shutdowns in service, where permitted, and operation of any valves on the existing system shall be done only by DES. To minimize shutdown time, connections to water lines shall be made by the Contractor only after complete preparations for such work have been done to the satisfaction of the Engineer.

2. Reaction backing at connections to existing mains shall be made with high early strength concrete. If line pressure must be restored less than 48 hours after the placement of reaction backing at these connections, provide temporary deadman and/or similar devices as required to maintain stability of the water mains.

C. Installing Valves and Fittings

1. Install valves, fittings, and caps to pipe in the manner specified herein before for laying pipe. Provide valve boxes for each buried gate valve. Boxes shall not transmit shock or stress to the valve. Center and plumb boxes over the operating nut of the valve, with the box cover flush. Valves shall be strapped to adjacent fittings unless directed otherwise.

2. Inserting valves and tapping sleeves and valves shall be installed in accordance with the valve manufacturer's recommendations. Test pits shall be dug by the Contractor to determine type and size of existing pipe and suitability of tapping location on the pipe.

D. Thrust Restraint

Provide caps, tees, bends, and inserting valves in water mains with reaction backing and other joint restraints such as EBAA Iron, Inc., MEGALUG Romac Industries, Smith Blair, or approved equal, except where tie rods are specified or indicated. Reaction backing shall consist of concrete thrust blocks as shown on the Standard Details. Valves for connections to future lines, fire hydrants and related valves, and other fittings or valves so indicated shall be anchored by steel rods protected by two coats of acid-resisting asphalt paint.

The use of reaction backing may be waived in the sole discretion of the Engineer if the Contractor provides calculations to indicate an adequate number of joints are restrained in proximity to caps, tees, bends and inserting valves. The limits of restraints shall be indicated clearly on the approved plans.

E. Water Service Connections

1. Water meters, including taps, pipe fittings, meter box, and accessories from the water main through the meter, will normally be furnished by, and installed by, Arlington County after payment of the appropriate fee. Connections from the meter installation to the building shall be installed by the Contractor.

2. The Department of Environmental Services has approval authority for all water meter locations. Water meters shall be located in the utility strip or just behind the curb within public right-of-way or recorded easements and a minimum of 5 feet horizontally clear from other utilities, structures, or trees.

3. The Contractor shall assume complete responsibility for the installation, adjustments and any damage that may occur until final acceptance of the project.

4. New water mains shall pass all acceptance testing procedures before installing water service connections.

5. All services shall be installed by wet tap only. Service taps shall be located at the 10:00 and 2:00 position on the water main. Maintain a minimum of 12 inches between taps. Direct taps are allowed for 3/4 inch and 1 inch connections. Use approved saddles for 1 -1/2 inch and 2 inch connections.

6. Water service lines shall have a minimum of three feet of cover and shall be approved by the Engineer, from the main to the meter, before backfilling. Meter settings for 1-inch to 2 inch services shall be a minimum of 18-inches and a maximum of 24-inches below the meter box cover. Meter box covers shall be painted black with an exterior type of rust resistant enamel.

7. Where specified that Contractor shall install the water service, meter boxes, meter box covers, corporation stops, angle valves, yoke ells, yoke bars, and all other appurtenances (except the water meter) necessary for a complete installation shall be provided in accordance with the approved plans, specifications, and DES requirements. Meter box covers shall be furnished by Bingham and Taylor, Capitol Foundry, Ford Meter Box Co. or approved equal.

F. Abandoning Existing Water Mains

1. Drain and abandon existing water mains not required in the completed system. Abandoned mains and appurtenances that conflict with proposed construction shall be removed as required. Abandoned mains not removed shall be capped or bulk headed at all open ends.

2. Valves to be abandoned shall be removed along with the valve box, or if abandoned in place, the valve box shall be removed and the resulting void shall be stabilized with flowable fill or by other approved means.

3. Cut and cap the existing water mains to remain in service at the locations indicated on the drawings, and provide with thrust block. Keep the length of pipe removed to the minimum necessary for installing the cap and concrete blocking. A cap shall be placed over the end of the pipe to be abandoned. The concrete thrust block shall be placed to bear against undisturbed ground. After this work has been completed, the capped line shall not be recharged unless directed by the Engineer.

4. Existing fire hydrants not required in the completed system shall be carefully removed, cleaned and transported to the Arlington County storage yard. Cap and anchor hydrant lead as close as possible to its control valve with concrete thrust block and tie rods if main is to remain in service.

   Arlington County Storage Yard:
   2700 S Taylor St, Arlington, VA 22206,
   Contact Name: Valerie Cooper
   Operating Hours: 6:30am – 2pm

4. Existing water services shall be discontinued by DES unless a written request is provided to DES for the temporary use of the service during construction. Water meter boxes and vaults shall be removed by the Contractor. Water meters will be removed by DES as required. No credit or allowance will be given for discontinued water services.

G. Disinfection of Water Mains

1. When each pipe length has been placed and shut off, disinfect each section of the water main in compliance with all state and local regulations. Disinfection shall conform to AWWA C601 requirements.

2. Water for disinfection, flushing and testing will be furnished to the Contractor from the existing water system at no charge to the Contractor. Schedule water usage with the Engineer to result in a minimum interference to water service throughout the existing water system. Temporary connections to the existing water system shall be provided and removed by the Contractor and shall include approved means to prevent backflow and possible contamination of the existing water system. Temporary taps for removing air and flushing the main shall be provided by the Contractor as necessary.

3. Disinfection of the water main shall be accomplished in the following manner:

   a. Preliminary Flushing of Mains: All mains shall be flushed before disinfection except when the tablet disinfection method is used. The mains shall be flushed at a minimum velocity of 2.5 feet per second and all points in the main shall receive a minimum of five (5) consecutive minutes of flushing at this velocity, until the water runs clear.

   b. Form of Chlorine to be used: Liquid chlorine, calcium hypochlorite, or sodium hypochlorite may be used for disinfection. Liquid chlorine shall be used only when approved by the Engineer. Calcium hypochlorite and sodium hypochlorite shall be added to water to form a chlorine water solution before being used.

   c. Methods of Application: The chlorine shall be applied by continuous feed method or by the tablet method only (slug method shall not be used). The application shall be performed as follows:

      a) Continuous Feed Method: Potable water shall be introduced into the pipe line at a constant flow rate. Chlorine shall be added at a constant rate to this flow so that the chlorine concentration in the water in the pipe is at least 50 mg/L. The chlorinated water shall remain in the pipe at least 24 hours, after which, the chlorine concentration in the water shall be at least 10 mg/L.

      b) Tablet Method: Tablet method shall not be used if trench water or foreign material has entered the main or if the water is below 5 ºC (41 ºF). Tablets are placed in each section of pipe and also in hydrant branches and other appurtenances. A sufficient number of tablets shall be used to ensure that a chlorine concentration in the water in the pipe is at least 25 mg/L. The tablets shall be attached by an adhesive to the top of the pipe sections and crushed or rubbed in all appurtenances. The adhesive shall be acceptable to the Virginia Department of Health (VDH). When installation has been completed, the main shall be filled with water at a velocity of less than one foot per second. The water shall then remain in contact with the pipe for at least 24 hours.

   d. Contact Period: The chlorinated water shall be retained in the main for at least 24 hours during which time all valves and hydrants, in the section treated, shall be operated in order to disinfect the appurtenances. The tests for chlorine residual shall be made by the Contractor in the presence of the Engineer. The Contractor shall install corporation cocks and copper tubing for the tests at the locations indicated by the Engineer.

   e. Flushing and Discharge: The Contractor shall be solely responsible for the disposal of all chlorinated water in accordance with these specifications and with all applicable Local, State, and Federal regulations and permits.

H. Hydrostatic Testing

1. Pressure tests shall conform to Section 4 of AWWA Standard C600.

2. The water mains shall be tested for leakage by the Contractor at his own expense in the presence of the Engineer. All tests will be conducted in a manner to minimize any interference with the Contractor's work or progress. A maximum of 2,000 linear feet of water main may be tested at one time.

3. The Contractor shall notify the Engineer when the work is ready for hydrostatic testing and tests shall be taken soon thereafter as practicable under the observation of the Engineer. Personnel for reading meters, gauges or other measuring devices will be furnished by the Engineer, but all other labor, equipment, water and materials, excluding meters and gauges, shall be furnished by the Contractor.

4. The water mains, including all appurtenances, shall be tested as a whole or in sections, valved, or bulkhead at the ends. Test piping under a hydrostatic pressure of 200 psig unless shown otherwise on the approved plans. Testing shall not be conducted against existing valves. Apply pressure to the piping after it has been purged of air. Maintain water pressure for a minimum of two hours. The test pressure shall not vary by more than 5 psi during the test. Testing procedures shall be in accordance with AWWA Standard C600 with the exception that in no case shall the measured leakage exceed 10 gallons/ inch of diameter/mile/day.

I. Final Flushing

All water mains shall be flushed after the acceptance of the hydrostatic test and before bacteriologic testing. The water mains shall be flushed at the highest flow possible through hydrants and/or blow-offs. The operation of any valves on the existing water system shall be done only by DES. Water discharged to the environment, storm, or sanitary sewer system shall be done in accordance with these specifications and all applicable regulations.

J. Bacteriologic Test

1. After chlorination, hydrostatic testing and final flushing, and before the water main is placed in service, samples shall be collected from the main and tested for enteric bacterial contamination and shall show the absence of coliform organisms. At least two (2) sets of consecutive satisfactory bacteriological samples 24 hours apart shall be obtained from the distribution system before the system can be placed into service. Samples shall be collected at all accessible locations not exceeding 2,000 feet apart in the line downstream from where the pipe was filled with water. Samples shall be taken through the use of sample tap consisting of a corporation cock and copper tube or through other accessible appurtenances on the main. Samples shall be collected by a representative of the testing laboratory.

2. All bacteriological sampling and testing shall be conducted by a state certified laboratory. If the initial disinfection fails to produce satisfactory samples, disinfection shall be repeated until satisfactory samples have been obtained. After each group of samples is taken, the Contractor shall submit a copy of the report stating the results of the tests in writing to the Engineer.

K. Repairs: Cleaning, disinfecting, flushing, testing, or similar operational actions shall be in accordance with the most current standards issued by AWWA (AWWA C-601).

L. Discharge of chlorinated water

1. The Contractor shall handle, discharge, and dispose chlorinated water in compliance with all regulations, including the County's Municipal Separate Storm and Sanitary Sewer (MS4) Permit.

2. No potable water shall be discharged to the environment or the storm sewer system until complete dechlorination has been achieved.

3. The Contractor shall identify, implement, and monitor appropriate dechlorination methods which comply with all applicable regulations.

4. The Contractor shall conduct testing on-site to confirm that chlorine has been removed from any water discharged to the environment or storm sewer.

5. The Contractor shall ensure that any discharge of dechlorinated water to the storm sewer or environment does not create any adverse impacts to the environment or infrastructure, such as erosion, or water volumes, temperatures, or velocities which adversely affect existing aquatic or terrestrial life in the receiving bodies.

6. Superchlorinated water which has been used to disinfect the system, or any water which exceeds the generally prevailing chlorine concentration in the system (measured as less than 4 mg/L), shall be discharged to the sanitary sewer system after submittal and approval of a discharge plan. The discharge plan shall be submitted in accordance with Arlington County Construction Standards and Specifications Section 01300, and shall document at a minimum:

   a. the receiving sanitary sewer manhole,
   b. the anticipated rate and duration of discharge,
   c. plans to prevent any hydraulic connection between wastewater and the water distribution system (backflow prevention or an adequate air-gap),
   d. listing of methods and equipment to be used,
   e. accommodations to maintain vehicular and pedestrian traffic during the operation.

7. Discharge of water to the sanitary sewer shall not exceed 200 gallons per minute.

8. Discharge of water to the sanitary sewer shall not occur without the Engineer present, and shall be conducted only after careful disinfection of all components connected to the water system.

9. At all times during discharge of water to the sanitary sewer system, the Contractor shall have personnel monitoring the discharge into the sewer to ensure there is no cross-connection and that there are no adverse impacts upon the water or sanitary sewer system.

10. If an adequate sanitary sewer facility is not available, the discharge plan may require use of a tanker truck to collect and dispose of the water in a sanitary sewer.

PART 4 - MEASUREMENT AND PAYMENT

Water mains will be measured in linear feet along the pipe center line through the length of fittings and valves and will be paid for at the contract unit price per linear foot of the type, class, and size shown on the plans. This price, shall include excavating, furnishing and installing standard bedding, pipe, thrust restraint, and fittings; backfilling, disinfecting, flushing, supporting existing utilities, testing, dewatering, trench maintenance, and abandoning and/or removing existing mains and appurtenances, regardless of installation depth and certification.

Valves (Type and Size) will be measured in units of each and will be paid for at the contract unit price per each. This price shall include excavating, furnishing and installing extension stems, thrust restraint, valve box, and paved collar as required; bedding, backfilling, disinfecting, and certification.

Fire hydrants will be measured in units of each and will be paid for at the contract unit price per each. This price shall include excavating, furnishing and installing hydrant and elbow, bedding, drainage gravel, and thrust protection; backfilling, disinfecting, and certification.

Remove existing fire hydrants will be measured in units of each and will be paid for at the contract unit price per each. This price shall include excavating, sheeting, shoring, backfilling, dewatering, removing, cleaning, capping hydrant branch, concrete thrust block and tie rods, joint restraint, and testing the cap. The price shall also include cleaning and transporting to the Arlington County storage yard.

Blow offs (size) will be measured in units of each and will be paid for at the contract unit price per each. This price shall include excavating, furnishing and installing bedding, pipe, fittings, gate valve, adaptor, cap, meter box, frame and cover, service clamp, corporation stop, and backfilling.

Connect to existing water mains (except connections made with tapping sleeves and valves) will be measured as each and will be paid for at the contract unit price per each. This price shall include test pitting, excavating, backfilling, furnishing and installing sleeves, dewatering, cutting, and thrust restraint.

Tapping sleeves and valves (size) will be measured in units of each and will be paid for at the contract unit price per each. This price shall include test pitting, excavating, furnishing and installing bedding, sleeve, valve, and valve box; thrust restraint, tapping, and backfilling.

Inserting valves (size) will be measured in units of each and will be paid for at the contract unit price per each. This price shall include test pitting, excavating, thrust restraint, furnishing and installing bedding, valve, and valve box; and backfilling.

Air release valves will be measured as each and will be paid for at the contract unit price per each. This price shall include excavating, tapping, furnishing and installing the entire setting, including but not limited to, nipples, piping, fittings, corporation cock, gate valves, air release valve, manhole, manhole steps, and frame and cover; bedding, and backfilling.

Cut and cap (size) water main to remain in service will be measured in units of each and will be paid for at the contract unit price per each. This price shall include excavating, cutting, capping, disinfecting, restraints, and backfilling.

Water Service Connections (size) will be measured in units of each and will be paid for at the contract unit price per each. This price shall include excavating, furnishing, and installing water meter and appurtenances and backfilling. The County will provide the water meter at no cost for service relocations.

Relocate Existing Water Meter will be measured in units of each and will be paid for at the contract unit price per each. This price shall include excavating, disconnecting, transporting, and installing water meter and appurtenances and backfilling.

The cost of restoring paved areas shall be included in the price of other appropriate work in accordance with the Special Provision for Restoring Existing Pavement.

The adjustment of existing or proposed water meters, hydrants, valves, and other appurtenances to match finished grade will not be measured for payment. All costs associated with the adjustment of water appurtenances to finished grade shall be included in the price of other items.

Payment will be made under:

Pay Item	**Pay Unit**
Water main (size)	Linear foot
Valve (Type and Size)	Each
Fire hydrant	Each
Remove existing fire hydrant	Each
Blow off (size)	Each
Connect to existing water main (size)	Each
Tapping sleeves and valve (size)	Each
Inserting valve (size)	Each
Air release valve	Each
Cut and cap (size)	Each
Water Service Connections (size)	Each
Relocate existing water meter	Each

ORDER NO.: L89
CONTRACT ID. NO.: C000109813C01B

VIRGINIA DEPARTMENT OF TRANSPORTATION
SPECIAL PROVISION FOR
CORROSIVITY TESTING

(CORROSION POTENTIAL OF SITE SOILS)

January 26, 2017

DESCRIPTION

This work shall consist of performing a geotechnical investigation by Geotechnical Engineer, who is a Professional Engineer holding a valid license to practice engineering in the Commonwealth of Virginia, to determine the corrosion potential of site soils for ductile iron pipe. A report summarizing the results and findings shall be provided including specific corrosion protection measures, as needed.

PROCEDURES

The Contractor shall collect Soil Samples at three (3) locations along the proposed 12" Ductile Iron Pipe Water Main to a depth equal to or lower than the elevations of the proposed water main and perform Laboratory testing to evaluate the corrosion potential of the site soils for ductile iron pipe using the "10 Point System" as specified by AWWA C-105. All soil tests necessary to determine the corrosion potential of site soils shall be performed, including but not limited to: Soil Resistivity, pH, Oxidation-Reduction (redox) potential, Sulfides, and Moisture.

MEASUREMENT AND PAYMENT

Corrosivity Testing will be paid for at the contract lump sum price. This price shall include collecting soil samples; perform laboratory tests, and providing a report of findings.

Payment will be made under:

Pay Item	Pay Unit
Corrosivity Testing	Lump

ORDER NO.: L89
CONTRACT ID. NO.: C000109813C01B

VIRGINIA DEPARTMENT OF TRANSPORTATION
SPECIAL PROVISION FOR

EXTERIOR PLANTS

March 6, 2017

PART 1 – GENERAL

1.01 SUMMARY

A. This work shall consist of furnishing and planting trees, shrubs, groundcover, bulbs, and perennial plants in accordance with the specifications, as shown on the plans, and as directed by the Engineer.

B. In addition to these specifications, Work shall be performed in accordance with the Arlington County Department of Parks & Recreation Design Standards as shown on the plans and available online at:

http://parks.arlingtonva.us/design-standards/

1.02 DEFINITIONS shall be in accordance with the Special Provision for Landscape Definitions.

1.03 SUBMITTALS

The Contractor shall submit the following to the Engineer for approval:

A. All submittals specified in the Special Provision for Planting Preparation

B. Product Certificates for each type of manufactured product, including but not limited to, manufacturer's certified analysis for standard products.

C. Top soil and planting soil mix test results in accordance with the Special Provision for Planting Preparation.

D. State Nursery inspection certificates.

E. Landscape Industry Certified Technician and Landscape Industry Certified Officer certificates for those responsible for plant installation.

F. Planting Schedule which shall indicate anticipated planting dates for exterior plants. The Contractor should investigate the sources of supply and satisfy himself/herself that he/she can supply all of the specified plants in the size, variety, quantity, and quality noted before submitting the bid. Failure to confirm supply will not relieve the successful bidder from the responsibility to furnish and install all of the plant material in accordance with the contract.

G. Substitutions:

a. The Contractor shall submit a written request for a substitute plant a minimum of forty-five (45) calendar days before planting date if specific plants will not be available in time for the scheduled planting. Contractor shall submit the request to the Engineer for approval as advised by the Landscape Architect or Urban Forester.

b. The Contractor shall document any plant suitability or availability problems.

c. If a substitute plant is offered, it shall be of the same size, value, and quality as the plant originally specified on the plans, as determined by the Engineer as advised by the Landscape Architect or Urban Forester. If the Engineer does not accept the substitute plant, the Contractor shall provide the type and size of plant material specified on the plans, or a substitute requested by the Engineer as advised by the Landscape Architect or Urban Forester.

H. Maintenance Instructions and Procedures for maintenance of exterior plants during a calendar year. Submit before the final project acceptance.

1.04 QUALITY ASSURANCE

A. Installer Qualifications:

a. The Contractor shall designate a project crew leader who possesses one or more of the following certifications:

i. Professional Landcare Network (PLANET) “Landscape Industry Certified Technician”

ii. Professional Landcare Network (PLANET) “Landscape Industry Certified Officer”

b. The Contractor shall identify to the Engineer at least one full-time on-site supervisor who is the Contractor’s competent, qualified, and authorized person on the worksite and who is, by training or experience, familiar with the policies, regulations, and standards applicable to the work being performed, and capable of sufficiently communicating with the Engineer.

c. Crew leader and supervisor may be the same individual.

B. Provide quality, size, genus, species, and variety of exterior plants indicated, complying with applicable requirements in the most current version of ANSI Z60.1, "American Standard for Nursery Stock." Plants shall be nursery grown stock and conform to the requirements in the most current issue of the American Standard for Nursery Stock (ANSI) published by the American Nursery and Landscape Association. The Engineer as advised by the Landscape Architect or Urban Forester may reject any non-conforming stock and has the option to field-select plant materials before purchasing.

C. Collected material may be used only when approved by Engineer as advised by Arlington County Urban Forester and/or DPR PNR Natural Resource Manager.

D. Nomenclature shall be in accordance with *Hortus III*, by L.H. Bailey. All trees and shrubs shall be labeled with a securely attached, waterproof tag bearing legible designation of botanical and common name. Perennials and groundcovers shall be clearly identified with a waterproof tag bearing legible designation of botanical and common name within the container.

E. The Engineer may perform periodic inspections accompanied by the Urban Forester.

1.05 WORKMANSHIP

A. Tree pruning shall conform to the most current version of ANSI A-300 Standard Practices for Trees, Shrubs, and Other Woody Plant Maintenance. Do not prune trees and shrubs before delivery.

B. Protect bark, branches, and root systems from sun-scald, drying, sweating, whipping, and other handling and tying damage. Do not bend or bind-tie trees or shrubs in a manner that could destroy their natural shape. Provide protective covering of exterior plants during delivery. Do not drop exterior plants during delivery. Plants shall not be bound with wire or rope. Plants shall be handled from the bottom of the root ball only.

C. All plants in transit shall be tarped or covered and shall be kept from drying out. Desiccation damage will be cause for rejection. Plants damaged in handling or transportation may be rejected by the Engineer as advised by the Urban Forester/Landscape Architect. Any tree or shrub found to have wounds over 12.5% of the circumference of any limb or trunk, or over 1-inch in any direction, whichever is smaller, will be rejected.

D. Deliver exterior plants after preparations for planting have been completed and install immediately. If planting is delayed more than six hours after delivery, set exterior plants trees in shade, protect from weather and mechanical damage, and keep roots moist. Plants shall not remain unplanted for longer three days after delivery. Any plants not installed during this time period will be rejected, unless Engineer and Contractor agree otherwise in writing. All plants kept on site for any period of time shall be watered and cared for using ANSI A300 standards.

E. Plants shall be installed immediately following excavation of the hole. No holes shall remain open overnight. The Contractor shall cover and barricade any open holes to effectively prevent any danger of injury to pedestrians.

F. During delivery and installation, the landscape contractor shall perform in a professional manner; coordinating his/her activities so as not to interfere with the work of other trades, and leaving his/her work area(s) clean of litter and debris at the close of each workday.

G. All areas shall be kept neat and clean, and precautions shall be taken to avoid damage to existing plants, trees, turf and structures during planting. Where existing trees are to be preserved, additional precautions shall be taken to avoid unnecessary accumulation of excavated materials, soil compaction, or root damage. The Contractor shall cover sidewalks or pavers with plywood, and cover turf with plywood, burlap, or tarp during excavation.

H. Areas damaged by the Contractor shall be restored to their original condition at no cost to the Department. All debris and waste material, including small stones and clumps of clay or dirt exceeding 1” by 1” in any direction, resulting from planting operations shall be removed from the project, disposed of, and the area cleaned up by the Contractor.

I. Plants with soil covering the root flare, if not removed by Contractor, will be rejected by Engineer as advised by Landscape Architect or Urban Forester.

J. Contractor is responsible for any costs incurred due to damage of utilities by their operations.

K. The Contractor will not be held responsible for unknown conditions such as concrete/asphalt/stone spoils encountered in excavation work which are not apparent at the time of bidding. Rocks, tree roots and hard clay are common elements of “urban” soils and will frequently be encountered during planting pit excavation.

L. No plants shall be planted in locations where drainage may, in the opinion of the Contractor, be unacceptable. Such situations shall be brought to the attention of the Engineer before work continues and, if deemed necessary by the Engineer as advised by the Landscape Architect/Urban Forester, the plants shall be relocated or the contract shall be modified to allow for drainage correction. Any such modification shall be in writing and signed by both parties.

M. The Contractor shall layout plants according to the project's landscape plan. The Engineer shall approve the layout as advised by the Landscape Architect before planting. Plants installed without layout approval from the Engineer as advised by Landscape Architect are subject to removal and replanting by the Contractor at no additional cost to the Department.

PART 2 - PRODUCTS

2.01 EXTERIOR PLANTS

A. The Contractor shall select plants only from nurseries that have been inspected by state or federal agencies and shall have been grown in USDA Plant Hardiness Zones 4, 5, 6, or 7, and in one of the following states: Maryland, Virginia, Delaware, New Jersey, North Carolina or Pennsylvania. Plant stock shall originate from a location within 150 miles of Arlington County.

B. Furnish nursery-grown trees and shrubs complying with ANSI Z60.1, with healthy root systems developed by transplanting or root pruning. Provide well-shaped, fully branched, healthy, vigorous stock free of disease, insects, eggs, larvae, and defects such as knots, sun-scald, injuries, abrasions, and disfigurement.

   a. Provide balled and burlapped, bare root or container-grown trees and shrubs, as indicated on the plans.

   b. Balled and Burlapped (B&B) plants shall be dug with firm root balls of earth and free of noxious weeds. There shall be no extra soil on top of the root ball or around the trunk. Balled and burlapped trees shall be securely held in place by untreated burlap and stout rope. Nylon rope is NOT acceptable. Loose, broken, or manufactured balls are unacceptable.

   c. Ball sizes shall be in accordance with current ANSI standards.

   d. In size-grading B&B single stem trees, caliper shall take precedence over height. For multiple-trunk trees, height measurement shall take precedence over caliper.

   e. Trees over 1" in caliper shall have a strong central leader (free and clear of branches or splits in the trunk) from the top of the root ball to a height of at least 6'-6". Only minimal bends in the trunk will be acceptable. Co-dominant stems and V-crotches will be cause for rejection.

   f. The root system of container-grown plants shall be well developed and well distributed throughout the container.

   g. All container-grown trees and shrubs that have circling and matted roots will be rejected.

C. Provide healthy, container-grown perennial plants with well-developed, fibrous root systems from a commercial nursery, of species and variety shown in the plans. All container grown plants shall be healthy, vigorous, well rooted and established in the container in which they are growing. A container grown plant shall have a well-established root system reaching the sides of the container to maintain a firm root ball, but shall not have excessive root growth outside the container.

D. Provide top size bulbs as shown on plan in accordance with most current version of ANSI A60 specification.

E. Field grown trees and shrubs shall be grown in soils of the Piedmont region, or west of that region in the above approved states and zones.

H. All plant materials shall be labeled by grower to identify genus, species, and cultivar, if applicable, in accordance with section 1.04

I. Bare root plants shall be dug with adequate fibrous roots. Do not root prune. Roots shall be protected during handling and planting to guard against drying out and damage.

2.02 OTHER MATERIALS

Soils, mulch, soil amendments, and other items related to planting preparation shall be in accordance with the Special Provision for Planting Preparation.

Aggregate No. 57 Stone shall be double washed and wrapped in filter fabric.

PART 3 – EXECUTION

3.01 EXTERIOR PLANTING

A. The Contractor shall attend a Pre-installation conference at Project site with Engineer, Arlington County Urban Forester and/or Department of Parks and Recreation (DPR) representative or County Landscape Architect.

B. The Contractor shall furnish and install all plant materials shown on the plans and plant list in accordance with the current Arlington County Standard Planting Details as published on the Arlington County website and as specified below.

C. Soil amendments shall conform to the Special Provision for Planting Preparation.

D. Plant Layout

a. The Contractor shall layout and space plants according to the project landscape plan.

b. When the layout is complete, the Contractor shall notify the Engineer for approval as advised by the Landscape Architect before installing the plants.

E. Bed Establishment:

a. Remove existing sod, turf, weeds or other plant material.

b. Rototill subgrade of planting beds to a minimum depth of 8-inches with the addition of 3-inches organic material. Edge and rake the entire planting bed.

c. Remove stones, clods, debris, sticks, roots and other foreign or extraneous matter larger than 1/2-inch in any dimension. Contractor shall legally dispose of them off Arlington County property.

d. Thoroughly blend planting soil mix off-site before spreading or spread topsoil, apply soil amendments and fertilizer on surface, and thoroughly blend planting soil mix.

e. Spread planting soil mix to a depth of 8-inches but not less than required to meet finish grades after natural settlement. Do not spread if planting soil or subgrade is frozen, muddy, or excessively wet.

f. Finish grade planting beds to a smooth, uniform surface plane with loose, uniformly fine texture. Roll and rake, remove ridges, and fill depressions to meet finish grades.

g. Planting shall be completed during the planting season when weather and soil conditions are suitable and in accordance with local practice. Plants shall not be installed in top soil that is muddy or frozen. **Lawns, trees and shrubs shall be installed between 03/15 and 06/15 or between 09/15 and 12/01**. If a project completion is outside of these planting periods, contact the Engineer who will contact the Arlington County Urban Forester to obtain a deferral or approval for out of season planting.

F. The Contractor shall provide a minimum of seven (7) business days' notice to the Engineer before installing the plant material (this is not the same as inspection notification).

G. At the request of the Engineer in coordination with the Urban Forester or Landscape Architect, the Contractor shall supply information specifying the provenance of the plant material. Provenance is the geographical origin of the seed or cutting used in propagation and can have a direct effect on plant vigor and survivability.

H. Landscape Plantings (Trees, Shrubs, Ground Covers and Perennials)

a. The Contractor shall install plantings in accordance with the plans and Arlington County DPR standard details available online at: http://parks.arlingtonva.us/design-standards/.

b. Prepare pit and/or planting bed in accordance with the standards and according to the plans. Place plant in pit by carrying by the root ball (not by branches or trunk) and plant per the DPR Standards. The plant shall remain plumb during and after backfilling.

I. Tree and Shrub Pruning: The **Contractor shall conform to the most current version of ANSI A-300 Tree Pruning Standards. Do not cut tree leaders. Remove only injured or dead branches from trees and shrubs or those that pose a hazard to pedestrians**. Make all cuts back to a lateral branch or bud. Cuts should be perpendicular above branch collar. Final pruning shall be done after the tree is in place. Do not prune into old wood on evergreens.

J. The Contractor shall protect exterior plants from damage due to landscape operations, operations by other contractors and trades, and others. Maintain protection during installation and maintenance periods. Treat, repair, or replace damaged exterior planting. Injured roots shall be pruned to clean ends before planting with clean, sharp tools per most current ANSI 300 specifications. Protect shrubs, groundcovers and perennials from hot sun and wind; remove protection if plants show evidence of recovery from transplanting shock.

K. The Contractor shall remove all tags, labels, strings and wire from the plants, unless otherwise directed.

L. The Contractor shall remove surplus soil and waste material, including excess subsoil, unsuitable soil, trash, and debris and dispose of them off of the project.

M. All trees to be contained within tree pits surrounded by paved surfaces shall have root balls less than four feet six inches (4'-6") in diameter. Trees with root balls larger than four feet six inches (4'-6") in diameter shall not be installed in tree pits surrounded by paved surfaces but may be installed at other locations within the project.

3.02 WATERING

A. The Contractor shall supply water for all plantings and shall water all plants at time of installation and 48 hours after installation, even if it is raining. The Contractor shall then water plantings at least twice per week at amounts specified below until final acceptance of work.

B. Each watering shall consist of:

a. 20 gallons per individual tree

b. 4 gallons per individual shrub

c. 1 gallon per 1 sq. yd. of shrub or perennial bed

d. 1 gallon per 3 sq. yd. of seed or sod

3.03 STAKING & GUYING TREES

A. Contractor shall stake and guy trees only if required by Urban Forester.

B. If staking and guying is required, the Contractor shall provide and install stakes and guying in accordance with the plans and DPR standard staking details for deciduous and evergreen trees.

3.04 MAINTENANCE

A. The Contractor shall maintain tree, shrub, perennial, bulb & groundcover plantings at his/her own expense until final acceptance of the plantings.

B. Maintenance shall include pruning, mulching, cultivating, watering, weeding, fertilizing, tightening and repairing stakes and guy supports; and resetting to proper grades or vertical position.

C. Prune all sucker growth and dead or broken branches at initial planting and as needed during the warranty period. Pruning shall conform to ANSI-300 Tree Pruning Standards.

D. No plants shall be fertilized without prior approval of Engineer as advised by the Urban Forester or Landscape Architect.

E. The Contractor shall re-mulch areas to a depth of two to three inches before final acceptance if more than six months elapse between planting and final acceptance. Mulch shall be of the same quality as mulch provided at the time of planting. Keep mulch six-inches away from trunks of trees and shrubs.

F. The Contractor shall perform weeding until final acceptance. A minimum of one weeding per month from April through October is required if time between planting and final acceptance extends through any months of the growing season.

G. If installed, the Contractor shall monitor and adjust all stakes and guy supports until final acceptance.

3.05 FINAL INSPECTION

A. The Contractor shall schedule the final inspection with the Engineer in coordination with the Urban Forester and/or Landscape Architect.

B. The Contractor shall notify Engineer at least one week in advance to arrange final inspection meeting with the Urban Forester and/or Landscape Architect.

C. Contractor shall conduct the final landscape material inspection in the presence of the Engineer, the Urban Forester, and/or Landscape Architect the later of three months after planting or upon substantial completion of construction work.

   a. The landscaping inspection will review all landscape work under the contract.

   b. All plants shall be alive and in good health at the time of final inspection.

   c. Any plant material that is 25% or more dead shall be considered dead and shall be replaced at additional cost to the Department. A tree will be considered dead when the main leader has died back, or 25% of the crown is dead.

D. The Contractor shall provide written inspection results.

E. The Contractor shall make replacements during the next planting period unless the Engineer specifies an earlier date.

F. The replacement plants will be reviewed for final acceptance no less than three months after installation. The Contractor shall water and maintain replacement material in accordance with sections 3.02 and 3.04 after planting until the replacement plantings are accepted by Engineer.

G. Replacement plants shall be the same size as the original plants with no additional soil additives used.

H. The Contractor will not be responsible for plants that have been damaged by vandalism, fire, removal, or other activities beyond the control of the Contractor.

PART 4 – MEASUREMENT AND PAYMENT

Plants will be measured in units of each as designated, Tree, Shrub, or Herb, and will be paid for at the contract unit price per each. This price shall include furnishing, planting, watering, planting preparation according to Special Provisions for Planting Preparation and maintaining.

Staking and Guying will not be measured but included in measurement and payment of individual plant item.

Payment will be made under:

Pay Item	**Pay Unit**
Plant	Each

ORDER NO.: L89
CONTRACT ID. NO.: C000109813C01B

VIRGINIA DEPARTMENT OF TRANSPORTATION
SPECIAL PROVISION FOR
INTERLOCKING CONCRETE PAVERS

March 6, 2017

1.1 Description of Work

This work shall consist of furnishing and installing interlocking concrete pavers and removing, salvaging, and resetting interlocking concrete hexagonal pavers to line and grade as shown on the plans, in accordance with the specifications, and as directed by the Engineer.

1.2 Applicable Specifications

A. American Association of State Highways and Transportation Officials (AASHTO)
B. American Society for Testing and Materials (ASTM)
C. Virginia Department of Transportation, Road and Bridge Specifications (VDOT)
D. Concrete Paver Institute (CPI), a division of the National Concrete Masonry Association (NCMA)
E. Interlocking Concrete Pavement Institute (ICPI)

1.3 Quality Assurance

A. Installation shall be performed by an installer with at least one year experience in placing interlocking concrete and brick pavers. A copy of the Contractor's current certificate from the interlocking concrete pavement institute paver installer certification program shall be submitted to the Engineer.

B. Job references from projects of a similar size and complexity shall be provided, including owner/client/general contractor names, postal address, phone, fax, and email address.

C. If site conditions vary from the plans, the Contractor shall notify Engineer before installation.

1.4 Submittals

A. Submit shop or product drawings and product data.
B. Samples of required concrete pavers:
   1) Four representative full-size samples of each paver type, thickness, color, finish that indicates the range of color variation and texture expected in the finished installation. color(s) selected by the Engineer from manufacturer's available colors.
   2) Accepted samples become the standard of acceptance for the work.
C. Submit sieve analysis for grading of bedding and joint sand.
D. Submit test results for compliance of paver unit requirements to ASTM C936 from an independent testing laboratory.
E. List of proposed sources for all materials.
F. Mock-ups: before layering out materials, a mock-up area should be completed.
   1) Install a 7ft x 7ft paver area.
   2) Use this area to determine surcharge of the bedding sand layer, joint sizes, lines, laying pattern(s), color(s), and texture of the job.
   3) This area will be used as the standards by which the work will be judged.
   4) Subject to acceptance by owner, mock-up may be retained as part of finished work.
   5) If mock-up is not retained, remove and properly dispose of mock-up.

1.5 Environmental Conditions

A. Do not install sand or pavers during rain or snowfall.
B. Do not use frozen sand.
C. Cover bedding sand and joint sand with waterproof covering if needed to prevent exposure to rainfall or removal by wind. Secure the covering place.

PART 2 - MATERIALS

2.1 Interlocking concrete pavers shall be manufactured in compliance with ASTM C936. Concrete pavers shall be 6 centimeters thick for sidewalk application and 8 centimeters thick for driveways.

A. Minimum average compressive strength of 8000 psi (55 MPa).
B. Maximum absorption of 5% when tested in accordance with ASTM C140.
C. Resistance of 50 freeze-thaw cycles, when tested in accordance with ASTM C67.
D. Interlocking concrete pavers shall be Pavestone Company (800-245-7283), Unilock, EP Henry, or approved equal. Paver type: Holland Stone, Heritage Series, color: Buff, Finish shall be tumbled and inverted or approved equal. The color of the pigment shall comply with ASTM C979.

2.2 Interlocking hexagonal pavers shall be existing salvaged pavers.

2.3 Bedding and joint sand shall be clean, non-plastic, and free from deleterious or foreign matter. The sand shall be natural or manufactured from crushed rock. Grading of samples shall be done according to ASTM C136. The particles shall be sharp and conform to the grading requirements of ASTM C33 as shown in Table 1.

Table 1

Grading requirements for Bedding and Joint sand

Sieve Size	Percent Passing
3/8 in. (9.50mm)	100
No. 4 (4.75mm)	95 to 100
No. 8 (2.36mm)	80 to 100
No. 16 (1.18mm)	50 to 85
No. 30 (600 um)	25 to 60
No. 50 (300 um)	10 to 30
No. 100 (150 um)	2 to 10

2.4 Aggregate used for compacted base shall be well graded crushed limestone or crushed stone specified as VDOT grade 21A as shown on plans.

2.5 Aluminum edge restraint shall be by Permaloc, Cleanline XL Sure Loc, or Cruv-Rite or approved equal edging 3/16” x 8”, with 12-inch x 3/8-inch diameter galvanized steel pins @ 1' on center, finish shall be Mill.

PART 3 - EXECUTION

3.1 The Contractor shall install a minimum 4-inch compacted aggregate base and 4 inch of concrete base for sidewalks when interlocking concrete pavers are used as shown on plans.

3.2 Aggregate base materials shall be compacted to a density of 95 percent of Modified Proctor Density with a tolerance of +1/4-inch to the following grades.

6 cm concrete pavers - 3 1/2-inch below finish grade of pavers
8 cm concrete pavers - 4 1/4-inch below finish grade of pavers

3.3 The Contractor shall install and screed the sand leveling course for concrete pavers loose to a thickness of 1-inch. The exact thickness shall be determined at the job site. Care shall be taken to ensure the leveling base is loose and is not disturbed.

3.4 The leveling base shall be treated with a soil stabilizer to prohibit the growth of grass.

3.5 The Contractor shall install concrete pavers hand tight, being careful not to disturb the laying bed. A string line may be required to keep straight lines. A motor-driven masonry saw shall be used to cut edges where straight pavers cannot be used. Hammer cutting is not acceptable. No cut segment shall be smaller than one third of a paver unit measured in any direction.

3.6 Concrete pavers shall then be vibrated into leveling base with a vibratory plate capable of 3,500 to 5,000 pound compaction force. This shall be done before any rain.

3.7 The Contractor shall fill joints with dry sand after vibration. Brush and vibrate sand into joints until they are completely filled then remove surplus sand.

3.8 Joints between pavers shall be 1/16 in. and 3/16 in. wide. No more than 5% of the joints shall exceed 1/4 in. wide to achieve straight bond lines. Joints shall not deviate more than 1/2 in. over 50 ft. from string lines.

3.9 All work to within three feet of the laying face shall be left fully compacted with sand-filled joints at the completion of each day. Cover the remaining un-compacted edge of the laying face and sand with waterproof covering.

3.10 Pavers shall be selected from four or more cubes to blend color and texture variations. The laying pattern is shown on plans.

3.11 Do not finish concrete base.

3.12 The Contractor shall install edge restraints 1/4-inch below the top of the edge pavers as shown on the plans.

3.13 The final surface elevations shall not deviate more than 3/8-inch under a 10 foot long straight edge.

3.14 The surface elevation of pavers shall be 1/8 to 1/4 inch above adjacent drainage inlets, concrete collars or channels.

3.15 The Contractor shall remove and salvage existing interlocking concrete hexagonal pavers by hand where indicated on plans and where necessary for conduit installation. The pavers shall be removed and set aside, stacked in a neat orderly manner clear of the traveled way of pedestrians and vehicles, protected from damage. The Contractor shall reset the pavers in locations indicated on the plans. Damaged or broken units shall not be used. Pavers not used shall be disposed of by the Contractor. The existing base and sand leveling course shall be removed and reconstructed as noted above.

3.16 Cover bedding sand and joint sand with waterproof covering if needed to prevent exposure to rainfall or removal by wind. Secure the covering place.

3.17 Pavers on existing bridge deck shall be placed with a 1 in. asphalt setting bed as shown on plans. Existing paver and setting bed depths shown on the drawings are assumed based on the Gateway Park plans. The Contractor shall verify depths in spot location before commencing work. If existing conditions are different than shown, an alternate design may be used as approved by the Engineer.

PART 4 - MEASUREMENT AND PAYMENT

Interlocking concrete pavers for sidewalk applications will be measured in square yards and will be paid for at the contract unit price per square yard. Measurement for payment will be the width shown on the plans by the actual length regardless of the actual dimension constructed, unless otherwise approved by the Engineer. This price shall include preparing the sub grade surface, furnishing, installing, and compacting the aggregate base and sand leveling base; furnishing and installing pavers and filter fabric and edge restraints, if required, and removing, salvaging, and protected from damage existing pavers.

Payment will be made under:

Pay Item	**Pay Unit**
Interlocking concrete pavers	Square Yard

ORDER NO.: L89
CONTRACT ID. NO.: C000109813C01B

VIRGINIA DEPARTMENT OF TRANSPORTATION
SPECIAL PROVISION FOR

INSPECT EXISTING UNDERDRAIN

January 23, 2017

I Description

This work shall consist of field verifying the presence of the existing underdrain by video camera inspection at locations where the proposed underdrain ties into existing underdrain to determine if it is functional and in serviceable condition in accordance with these specifications and as directed by the Engineer.

Video inspection of “upstream sections” of existing underdrain will not be required at tie in locations where the direction of flow of the existing underdrain is towards the proposed underdrain.

II Procedures

The Contractor shall verify the presence of existing underdrain at the proposed tie in location before installing proposed underdrain. If existing underdrain is confirmed, the Contractor shall perform a video camera inspection on the existing pavement underdrain in accordance with Virginia Test Method (VTM) 108 between the proposed tie in location and the existing underdrain outfall. The results of the underdrain inspections shall be reported in the attached form and submitted to the Engineer along with any digital recordings and photographs. The Contractor shall not perform video camera inspection without the Engineer’s approval.

III Measurement and Payment

Underdrain Inspect Existing will be measured in linear feet and will be paid for at the contract unit price per linear foot. This work shall include verifying the presence of existing underdrain, performing a video camera inspection, and providing a report of findings.

Payment will be made under:

Pay Item	Pay Unit
Underdrain Inspect Existing `	Linear Foot

VIRGINIA DEPARTMENT OF TRANSPORTATION
_____ DISTRICT MATERIALS
UNDERDRAIN INSPECTION REPORT

CONTRACTOR: _____

DATE: _____

PROJECT NO.: _____ UPC NO.: _____

BY: _____

TYPE UD: _____ MEASUREMENT UNITS: (NAME / SIGNATURE)

☐ FEET ☐ METERS

OUTLET			LANE		TESTED LENGTHS			METHOD		INSP.	EW-12	
NO.	STATION	PIPE DIA.	DIR	SHLD	1 DIR	OUTLET DIST.	TOTAL DIST.	CAMERA	PROBE	SATISF. Y / N	SATISF. Y / N	COMMENTS

1 DIRECTION IN WHICH CAMERA IS LOOKING, WHICH MAY BE OPPOSITE THE LANE DIRECTION.

ORDER NO.: L89
CONTRACT ID. NO.: C00010981 3C01B

ORDER NO.: L89
CONTRACT ID. NO.: C000109813C01B

VIRGINIA DEPARTMENT OF TRANSPORTATION
SPECIAL PROVISION FOR

IRRIGATION SYSTEM

February 16, 2017

I Description

The work shall include, but is not limited to the following:

(1) Trenching and backfilling
(2) Furnishing and installing an automatically controlled irrigation system
(3) Testing the systems and making them operative
(4) Furnishing "As-built" drawings

II Miscellaneous

A. Inspections required during the course of construction shall be arranged as required. Satisfactory evidence shall be furnished to the Engineer representative to show that all work has been installed in accordance with the ordinances and code requirements.
B. Before any work is started, a conference shall be held between the Contractor and the Engineer concerning the work under this contract.
C. Coordinate and cooperate with other contractors to enable the work to proceed as rapidly and efficiently as possible.
D. Site Conditions:
   1) Should utilities not shown on the plans be found during excavations, the Contractor shall promptly notify the Engineer. Failure to do so will make the Contractor liable for any and all damage thereto arising from his operations subsequent to discovery of such utilities not shown in plans.
   2) The Contractor shall make necessary adjustments in the layout as may be required to connect to existing stub outs, should such stubs not be located exactly as shown, and as may be required to work around existing work at no additional cost to the Department.
E. The Contractor shall take necessary precautions to protect existing plants and conditions to remain. Should damage be incurred, the Contractor shall repair the damage to its original condition at his expense.
   1) The Engineer may substitute, add, or delete any material or work as the work progresses. Adjustments to the contract price shall be negotiated if deemed necessary by the Engineer.
   2) The Engineer will reject work deemed unacceptable. Rejected work shall be removed or corrected at the earliest time possible at the Contractor’s expense.
F. The Contractor shall prepare an "as-built" drawing on a blueprint which shall show deviations from the plans made during construction affecting the main line pipe, controller locations, remote control valves, and quick coupling valves. The drawings shall also indicate of size, material, and manufacturers name and show approved substitutions and catalog name and catalog number. The drawings shall be delivered to the Engineer before final acceptance of work.
G. All work shall be guaranteed for one year from date of acceptance against all defects in material equipment and workmanship. Guarantee shall also cover repair of damage to any part of the premises resulting from leaks or other defects in material, equipment, and workmanship to the satisfaction of the Engineer. Repairs, if required, shall be done promptly at no cost to the Department.

III MATERIALS

A. Plastic piping: all main lines shall be class 200 O-ring polyvinyl chloride (PVC) pipe and shall conform to ASTM D-2241 CC 200 with gaskets conforming to ASTM1869 F477. All lateral piping shall be PVC class 160 solvent weld conforming to ASTM D-1784 and D-2241.
B. Plastic fittings: Sch. 40 solvent weld, polyvinyl chloride (PVC) standard weight as manufactured by Sloane, Lasco, Rainbird or County approved equal.
C. Solvent cement: compatible with PVC pipe, of proper consistency and color.
D. Sprinkler head risers: Sch. 40 PVC for risers. Pipe shall be cut in a standard pipe cutting tool with sharp cutters. Ream only to full diameter of pipe and clean all rough edges or burrs. Cut all threads accurately with sharp dies, not more than three (3) full threads shall show beyond fittings when pipe is made up. Assemblies shall be as detailed.
E. Automatic controllers: see legend.
F. Remote control valves: see legend.
G. Control wiring: 24 volt solid UL approved for direct burial in ground. Minimum wire size: 12 gauge.
H. Sleeves for control wiring: under all walks and paved areas and where indicated on drawings, minimum PVC 1220-160 psi plastic pipe.

SLEEVE SCHEDULE:

PIPE SIZE	SLEEVE SIZE
3/4"	1-1/4"
1"	2"
1-1/4"	2-1/2"
1-1/2"	2-1/2"
2"	3"
2-1/2"	4"
3, 4"	6"

I. Sprinkler heads: see legend.
J. Quick coupling valves: shall be noted on drawings.

IV EXECUTION

3.1 Workmanship

A. Layout work as accurately as closely as possible to the drawings. The drawings are generally diagrammatic to the extent that swing joints, offsets, and all fittings are not shown.
B. The Contractor shall provide full and complete coverage of all irrigated areas and shall make any necessary minor adjustments at no additional cost to the Department.
C. Any major revisions to the irrigation system shall be submitted to the Engineer in writing and will be addressed in writing.

3.2 Installation

A. Excavation and trenching:
   Perform all required excavations including shoring of earth banks to prevent cave-ins. Restore all surfaces, existing underground installations, etc., damaged or cut as a result of the excavations to and in a manner approved by the Engineer.
B. Trenches shall be wide enough to allow a minimum of 6 inches between parallel pipe lines. Trenches for pipe lines shall be sufficiently depth to provide the minimum cover from finish grade as follows:
   1) 18" minimum cover over main lines
   2) 12" minimum cover over lateral lines to heads.
   3) Maintain all warning signs, shoring, barricades, flares, and red lanterns as required.
C. Pipe line assembly:
   1) Install remote control valves where shown and group together where practical.

2) Plastic pipe and fittings shall be welded using solvents. Pipes and fittings shall be thoroughly cleaned, free of dirt, dust, and moisture before applying solvent with a non-synthetic bristle brush.
3) Pipe may be assembled and welded on the surface.
4) Make all connections between plastic pipe and metal valves or steel pipe with threaded fittings using plastic male adapters.

D. Sprinkler heads:
1) Install all sprinklers as detailed on drawings.
2) Do not scale plans for exact head location.

E. Closing of pipe and flushing lines:
1) Cap or plug all openings as soon as lines have been installed to place until removal is necessary for completion of installation.
2) Thoroughly flush out all water lines before installing heads, valves, and other hydrants.
3) Test in accordance with hydrostatic tests.
4) Upon completion of the testing, the Contractor shall complete assembly and adjust sprinkler heads.

3.3 Distribution

A. Hydrostatic tests:
1) Request the presence of the Engineer in writing at least 48 hours in advance of testing.
2) Testing shall be performed in the presence of the Engineer.
3) Center load piping with small amount of backfill to prevent arching or slipping under pressure.
4) Apply a continuous and static water pressure of 125 psi with the risers capped using industry standards after welded plastic joints have cured at least 3 hours.
5) Main lines and submains shall be tested for 3 hours. For O-ring gasket pipe the allowable leakage shall not exceed the industry standard number of gallons per hour.

The allowable rate of leakage shall be less than the number of gallons per hour determined by the following formula:

$$L = \frac{ND(P)^{1/2}}{3700}$$

L = allowable leakage in gallons per hour
N = number of joints in section tested
D = nominal diameter of the pipe in inches
P = average test pressure maintained during the leakage test in psi gauge

B. Automatic controllers:
Connect remote control valves to existing controller corresponding with station.

C. Automatic control wiring:
1) Install control wiring, sprinkler mains, and laterals in common trenches wherever possible.
2) Install control wires at least 18" below finish grade and lay to the side and below the main line. Provide looped slack at valves and snake. Tie wires in bundles wires in trench to allow for contraction of wires at intervals.
3) Control wire splices will be allowed only runs over 1000 ft. Connections shall be as detailed in the approved plans.
4) All wiring passing under existing or future paving, construction, etc., shall be encased in plastic or galvanized steel conduit extending beyond edges of paving or construction at least 12 inches.

D. Backfill and compacting:
   1) After system is operating and required tests and inspections have been made, backfill excavations and trenches with clean soil, free of rubbish.
   2) Backfill for all trenches, regardless of the type of pipe covered, shall be compacted to minimum 90% density.
   3) Compact trenches in areas to be planted thoroughly flooding the backfill. Jetting process may be used in those areas.
   4) Dress all areas to finish grades.

V MEASUREMENT AND PAYMENT

Irrigation system will be paid for at the contract lump sum price. This price shall include trenching, furnishing and installing, testing, backfilling, and providing “As-built” drawings.

Payment will be made under:

Pay Item	Pay Unit
Irrigation System	Lump Sum

ORDER NO.: L89
CONTRACT ID. NO.: C000109813C01B

VIRGINIA DEPARTMENT OF TRANSPORTATION
SPECIAL PROVISION FOR

LANDSCAPE DEFINITIONS

February 20, 2017

PART 1 - DEFINITIONS

A. Finish Grade: Elevation of finished surface of planting soil.

B. Imported Topsoil: Soil obtained off-site that meets these specifications for topsoil and is suitable for use in planting soil/backfill soil mixture when existing soil quantities are insufficient.

C. Planting Soil/Backfill Soil Mixture: Existing soil modified as specified to be suitable for planting.

D. Subgrade: Surface or elevation of subsoil remaining after completing excavation, or top surface of a fill or backfill, before placing planting soil.

E. ISA: International Society of Arboriculture

F. CBAY: Chesapeake Bay, typically referring to CBAY watershed.

G. Urban Forester/County Urban Forester: The Arlington County Urban Forester

H. Landscape Architect: An Arlington County Landscape Architect or their designee.

ORDER NO.: L89
CONTRACT ID. NO.: C000109813C01B

VIRGINIA DEPARTMENT OF TRANSPORTATION
SPECIAL PROVISION FOR

PLANTING PREPARATION

March 6, 2017

PART 1 - GENERAL

1.01 SUMMARY

A. This work shall include furnishing and installing erosion control materials, soil amendments, mulch, and topsoil in accordance with these specifications, according to the specifications, and as directed by the Engineer.

B. In addition to the specifications contained herein, the work shall be performed in accordance with the Arlington County Department of Parks & Recreation Design Standards as shown on the plans and available online at:

http://parks.arlingtonva.us/design-standards/

1.02 DEFINITIONS shall be in accordance with the Special Provision for Landscape Definitions.

1.03 SUBMITTALS

A. Samples of all materials specified shall be submitted to the Engineer for approval as advised by the Landscape Architect. All approvals shall be in writing.

B. Samples:

a. Existing Topsoil: Provide 1-pound sample of existing topsoil with the following soil test reports.

i. Fertility: pH, nitrate nitrogen, ammonia nitrogen, phosphate phosphorous, potassium, calcium, magnesium, zinc, iron, manganese.
ii. Suitability: total salinity, boron, sodium, potassium, calcium, magnesium, chloride, sulfate.
iii. Physical properties including organic content and particle size distribution.

b. Imported Topsoil: If imported topsoil is required, Contractor shall provide a 1-pound sample of the imported topsoil with the soil test reports as noted above for “Existing Topsoil.”

c. Mulches and Organic Matter/Compost: Sample of mulch and organic matter.

d. Product certificates: Contractor shall submit for each type of manufactured product, to be approved by the Engineer as advised by the Landscape Architect or Urban Forester and complying with the manufacturer’s certified analysis for standard products.

C. Geotextile/Soil Stabilization/Erosion Control Fabric: Sample.

1.04 QUALITY ASSURANCE

A. The Contractor shall have all existing and furnished topsoil to be used for seeding and sodding, and for planting areas tested by a state laboratory or recognized commercial soil-testing laboratory to determine recommendations for the types and quantities of soil amendments. The results of this test will determine the rates and types of fertilizers, lime, soil conditioners, and other amendments, if necessary.

   a. Soil tests shall use a representative sample of on-site soils. If existing soil has been undisturbed and is suitable as determined by the soil test, no additional amendments are required.

   b. Adjustments shall be made based on soil test results.

PART 2 - PRODUCTS

2.01 MATERIALS

A. All materials shall conform to those stipulated below, unless otherwise approved in writing by the Engineer as advised by the Landscape Architect or County Urban Forester.

B. Specified materials to be applied in amounts and methods herein stipulated.

C. Delivery tickets indicating date, weight, analysis and vendor's name, to be submitted to Engineer.

2.02 SOIL AMENDMENTS

A. Lime material type and application rates shall be determined by soil tests and approved by the Engineer in coordination with the Landscape Architect or Urban Forester and as shown on the plans.

   a. When required, unless test results indicate otherwise, lime material shall be dry and free flowing pulverized limestone, hydrate lime, or burnt lime that contains at least 50% total oxides (calcium oxide plus magnesium oxide). Ground limestone shall be ground to such fineness that at a minimum of 50% will pass through a 100 mesh sieve and 98% - 100% will pass through a 20 mesh sieve. Lime material shall meet the Virginia Agricultural Liming Materials Act, Code of Virginia Section 3.1-126.1.

B. Fertilizer type and application rate shall be determined by results of soil tests and approved by the Engineer in coordination with the Landscape Architect or Urban Forester and as shown on the plans:

   a. When required, unless test results indicate otherwise, commercial-grade complete fertilizer shall be of neutral character, consisting of fast- and slow-release nitrogen, 50 percent derived from natural organic sources of urea formaldehyde, phosphorous, and potassium in the following composition: 10 percent nitrogen, 20 percent phosphorous, and 10 percent potassium, by weight.

   b. All fertilizers shall be uniform in composition, free flowing, and suitable for application by approved equipment.

   c. Fertilizers shall be delivered to the site fully labeled according to applicable state fertilizer laws and shall bear the name, trade name, or trademark and warranty of the product.

C. Do not mix fertilizer with planting soil if planting will not proceed within 2 days.

D. Spread fertilizer and lime with approved equipment.

2.03 EXISTING TOPSOIL

A. Existing, native surface topsoil formed under natural conditions with the duff layer retained during excavation period and stockpiled. The Contractor shall verify suitability of stockpiled soil to produce or to be amended to produce viable planting soil for lawns and planting beds as described herein.

B. Existing topsoil shall be used to extent possible for lawn areas and shall be amended according to the specifications for use in planting pits and bed areas as Planting Soil/Backfill Soil Mixture.

C. Before using for lawn areas or in planting soil mix, Contractor shall remove all stones, roots, plants, sod, clods, and clay lumps larger than 1/2-inch in any direction, pockets of coarse sand, concrete slurry, concrete layers or chunks, cement, plaster, building debris, and other extraneous materials that are harmful to plant growth.

D. After removal of debris and extraneous materials noted above, the Contractor shall obtain soil tests for the existing soil in accordance with Section 1.04 “Quality Assurance.”

E. The Contractor shall submit soil test results to the Engineer for approval as advised by the Landscape Architect or Urban Forester.

F. The Contractor shall supplement the existing soil as recommended in soil test results to achieve a viable planting soil for lawns and/or planting beds. The Contractor shall supplement with imported topsoil in accordance with the specifications from off-site sources when quantities of approved, existing topsoil are insufficient for lawns and planting beds.

G. The Contractor shall submit a sample of the topsoil that has been amended based on soil test results for approval by the Engineer as advised by Landscape Architect or Urban Forester before using in lawn areas or planting beds or pits.

H. Topsoil installed on grade shall be similar to existing soil texture as approved by the Engineer, except where clay subsoil exists. Where clay subsoil exists, use loam or silt loam topsoil.

2.04 PLANTING SOIL MIX/BACKFILL SOIL MIXTURE

A. The planting soil mix (also known as backfill soil mixture) shall consist of existing topsoil that has been approved for planting in accordance with these specifications and approved organic matter.

B. The planting soil mix/backfill soil mixture shall be composed of 3/4 approved existing topsoil and 1/4 approved organic matter as described in the Arlington County DPR Standard planting details, unless otherwise indicated by the Engineer as advised by the Landscape Architect or Urban Forester.

2.05 IMPORTED TOPSOIL

A. The Contractor shall add imported topsoil when required on the plans, when quantity of existing topsoil is insufficient, or when determined to be necessary due to soil testing results.

B. Topsoil shall be the natural, original surface soil, a sandy loam uniform in composition and shall be in a friable condition and shall contain less than 3 percent subsoil, hardpan material, or stones and clods larger than 1/2-inch in diameter in any direction. It shall also be free of sticks, tree or shrub roots, debris, and other material undesirable for plant growth. The area and the topsoil shall be free of undesirable plant such as, but not limited to, Bermuda grass, nut sedge, mugwort, or noxious weeds as set forth in the Federal Seed Act.

C. The topsoil shall contain at least 5 percent organic matter. It shall be a sandy loam consisting of at least 5 but not more than 20 percent clay, at least 10 but not more than 80 percent sand. It shall have a pH between 5.5 to 6.5. Soluble salts (salinity) shall not exceed 500 ppm. Soil fertility shall be “High” in natural nutrients based on the coordinated ratings in pounds per acre as established by the National Soil and Fertilizer Research Committee.

D. Topsoil which has been manufactured by blending materials which individually do not meet these specifications will not be accepted even though the resulting blend meets the organic matter, mechanical analysis, pH and soluble salts requirements. Agricultural limestone at not more than 5 pounds per cubic yard of topsoil may be used to adjust the pH provided it is well mixed in a manner which does not destroy the structure of the soil.

2.07 MULCHES AND ORGANIC MATTER

A. Straw Mulch for Seeded Areas: Provide air-dry, clean, and mildew and seed-free, threshed straw of wheat, rye, oats, or barley; or salt hay.

B. Wood Chip Bark Mulch for Planted Areas shall be double-shredded aged hardwood bark mulch, uniform in size and color and free of stones, clods, non-organic debris, or other foreign material, having no particle with a dimension less than 0.5 inches or greater than 3/4 inch and aged for at least 6-12 months from an approved source. Insufficiently or improperly aged mulch containing high bacterial counts or high levels of non-decomposed bark or other materials resistant to decomposition shall not be used. Mulch shall not contain the trunk of trees.

C. Organic Matter/Compost Mulch shall be well-composted, trash-free, stable, and weed-free organic matter such as composted bark, leaf mold or other plant debris material that has been composted to a point of decay and is mature.

   a. pH range of 5.5 to 8; moisture content 35 to 55 percent by weight
   b. 100 percent passing through 1-inch sieve
   c. Peat moss shall not be used.
   d. Organic amendments shall be commercially prepared and shall comply with the U.S. Compost Council Seal of Testing Assurance Program’s Test Methods for the Examination of Composting and Compost (STA/TMECC) criteria, or as modified in approved plan documents.

PART 3 - EXECUTION

3.01 PREPARATION

A. All identified areas within the project limits shall have approved topsoil mix spread on them and be prepared for seeding and sodding by bringing ground surfaces to grades shown on the drawings. Planting pits and bed areas identified on the plans shall be prepared in accordance with the applicable DPR Landscape Standard details as shown on plans.

   a. Install erosion-control measures.

   b. Rototilling shall not be performed within the critical root zone of trees to be preserved.

c. The soil shall not be tilled or amended when the soil's moisture capacity is above field capacity or when the soil is frozen.

d. The Contractor shall identify utilities, existing irrigation, and underground utilities. All areas on either side of the utility marking shall be amended by hand.

e. The Contractor shall verify that no foreign or deleterious material or liquid has been deposited in soil within a planting area.

f. The Contractor shall not proceed with installation until unsatisfactory conditions have been corrected and rough grading has been completed and approved by the Engineer as advised by the Landscape Architect or Urban Forester.

g. The Contractor shall protect structures, utilities, sidewalks, pavements, trees, shrubs plantings, and other facilities from damage caused by planting operations.

h. Protect adjacent and adjoining areas from hydro-seeding and hydro-mulching overspray.

i. Protect grade stakes set by others until the progress of work allows for them to be removed.

j. Surfaces shall conform to finish grade and be free of water retaining depressions and the soil friable, free of clay, and of uniformly firm texture.

B. Loosen newly graded subgrades to a minimum depth of 6-inches. Remove stones larger than 1/2-inch in any direction, sticks, roots, rubbish, and other extraneous matter including grass vegetation and turf and dispose of them off of the project. Do not mix into surface soil.

a. Thoroughly blend planting soil mix off-site before spreading or spread topsoil, apply soil amendments and fertilizer on surface, and thoroughly blend planting soil mix. Do not mix amendments with soil if planting will not proceed within 2 days.

b. Loosen surface soil to a depth of at least of 6-inches. Apply soil amendments and fertilizers according to planting soil mix proportions and mix thoroughly into top 4-inches of soil. Till soil to a fine textured homogeneous mix.

c. Spread planting soil mix to a depth of 4-inches but not less than required to meet finish grades after light rolling and natural settlement. Do not spread if planting soil or subgrade is frozen, muddy, or excessively wet.

C. If lawns are to be planted in areas unaltered or undisturbed by excavating, grading, or surface soil stripping operations, prepare surface soil as follows:

a. Remove stones larger than 1/2-inch in any dimension, sticks, roots, trash, and other extraneous matter. Dispose them off of the project. Do not mix into surface soil.

b. Loosen surface soil to a depth of at least 6-inches, apply soil amendments and fertilizers according to the planting soil mix proportions and mix thoroughly into the top 4 inches of soil.

D. Finish grade landscape areas to a smooth, uniform surface plane with loose, uniformly fine texture. Grade to within plus or minus 1/2-inch of finish elevation. Adjust for the thickness of sod, where applicable. Roll and rake, remove ridges, and fill depressions to meet finish grades. Limit fine grading to areas that can be planted in the immediate future.

E. The Contractor shall avoid unnecessary compaction of the soil during grading.

F. The Contractor shall ensure appropriate slopes of the swales, berms, and final grades.

G. Immediately following each day's work, the Contractor shall clean all dirt, excess soil, debris, and trash from the site. The Contractor shall protect and store additional soils in stockpiles protected from saturation, erosion, weed growth, and contamination with plastic sheeting or tarps.

H. Amendments for seeding and sodding areas shall be applied after determining by soils test as follows:

   a. Lime as specified shall be spread uniformly over designated area. Rate depends on soil tests. Soil tests shall be made before lime application at 8 to 10 plugs per acre taken by the method prescribed the United States Department of Agriculture.

   b. Fertilizer shall be spread after the lime has been applied. Rate shall be as recommended per the soil tests.

   c. Fertilizer shall be spread with approved equipment and at an even rate over the area to be seeded or sodded.

   d. Work lime and fertilizer into top 4-inches of topsoil and grade to smooth surface ready for seeding.

I. Restore areas if eroded or otherwise disturbed after finish grading and before planting.

J. Prepared lawns and planting areas shall be inspected and approved by Engineer as advised by Landscape Architect before seeding, sodding, or planting.

K. If the graded areas develop volunteer weed growth, the growth shall be eliminated at the Contractor's expense.

3.02 SOIL STABILIZATION MATERIALS

A. Prepare planting area as specified.

B. Moisten prepared planting area before planting if surface is dry. Water thoroughly and allow surface to dry before planting. Do not create muddy soil.

C. Install Soil Stabilization from top of slope, overlapping joints by 12-inches, working downward, and as recommended by material manufacturer for site conditions. Fasten as recommended by material manufacturer.

D. Plant shrubs, trees, and perennials through Soil Stabilization fabric by carefully separating fabric layers to allow space for planting.

E. Remove non-biodegradable stabilization materials after plant establishment.

PART 4 - MEASUREMENT AND PAYMENT

Planting Mix will not be measured for separate [payment but the cost thereof shall be included in the price of individual plants in accordance with the Special Provision for Exterior Plants.

Seed and Mulch will be measured in square yards and will be paid for at the contract unit price per cubic yard. This price shall include furnishing and installing mulch, topsoil, fertilizers, seed, jute or other synthetic matting and staples necessary to protect against erosion and required for a satisfactory growth of grass.

Payment will be made under:

Pay Item	**Pay Unit**
Seed and Mulch	Square Yard

ORDER NO.: L89
CONTRACT ID. NO.: C000109813C01B

VIRGINIA DEPARTMENT OF TRANSPORTATION
SPECIAL PROVISION FOR

RAISED CONCRETE PLANTER

January 24, 2017

I Description

This work shall consist of furnishing and installing raised precast concrete planters as shown on the plans, in accordance with these specifications, and as directed by the Engineer.

II MATERIALS

Raised Concrete Planter shall be 96”x48”x36” precast concrete planter standard weatherstone finish, W21 Buff color, unit weight 4,300 lbs. by Wausau Tile model TF4212, FS Industries, Quick Crete Products or approved equal.

III PROCEDURES

The Contractor shall submit product shop drawings, including overall dimensions and options; to the Engineer for approval before fabrication and installation.

Install the raised concrete planters as shown on the plans.

Raised concrete planters shall include the standard manufacturer’s warranty.

IV MEASUREMENT AND PAYMENT

Raised Concrete Planer (Size) will be measured in units of each and will be paid for at the contract unit price per each. This price shall include fabricating, furnishing, and installing.

Payment will be made under:

Pay Item	Pay Unit
Raised Concrete Planer (Size)	Each

ORDER NO.: L89
CONTRACT ID. NO.: C000109813C01B

VIRGINIA DEPARTMENT OF TRANSPORTATION
SPECIAL PROVISION FOR

ROCK EXCAVATION IN OPEN EXCAVATIONS

January 24, 2017

I. DESCRIPTION:

This work shall consist of excavating rock open excavations as shown on the plans, specified herein, and directed by the Engineer in accordance with the specifications. The work shall include, but not be limited, to the following:

1. Excavating rock using mechanical excavation equipment and methods that will limit vibrations and noise to and below the response levels specified.
2. Removing and disposing of excavated rock.

II. SITE INFORMATION:

Engineering Geology Sheets are included in the plans for use by the Contractor. Data on subsurface conditions are not intended as representations or warranties of continuity of such conditions. The data are made available for the convenience of the Contractor, and it is expressly understood that the Department will not be responsible for interpretations or conclusions drawn there from by the Contractor.

The Contractor or prospective bidders may obtain right-of-entry before bidding and complete whatever investigations, research, tests, or analyses required for bid purposes.

III. PROCEDURES:

A. Protection of Existing Structures

The Contractor shall take precautions to prevent damage to existing structures and utilities in accordance with Sections 107.12 and 401.03 (g) of the Specifications. These measures shall include but are not limited to, vibration monitoring and subsidence control during driving of casing, sheets, hoe ramming, excavation, or drilling.

B. General Methods and Equipment

General

Rock material in beds, ledges, unstratified masses, conglomerate deposits, and boulders of rock material exceeding 3/4 cubic yard for footing excavations that cannot be removed by rock excavating equipment shall be removed using large hydraulic excavation equipment in conjunction with hoe ramming techniques and line drilling. Closely spaced line drilling should be performed such that the excavation is completed using hoe ramming equipment or by excavating. Monitoring of the hoe ramming should be carried out, at least initially, to measure the vibrations to ensure that they are less than or equal to the acceptable threshold value of 0.5 inches per second at the nearest structure.

Excavate rock using drilling and splitting methods, pneumatic hammers, rock saws or road headers, hydraulic splitters, wedging, barring or other low vibration methods. Soundless Chemical Demolition Agents may be utilized subject to review and acceptance by VDOT. Line drill within the excavation, as required, to create excavation faces and/or slots in rock to keep vibrations below specified limits.

Should line drilling be required:

i. Line drill rock where required by drilling 2-inch to 3-inch diameter closely spaced holes, typically spaced 4-inches to 6-inches on center, to control perimeter over break by providing a plane of low resistance to breakage along the perimeter of the excavation.
ii. In those areas where the drill head cannot start precisely on the excavation line, drill holes shall be slightly angled to achieve the excavation limits shown on the Contract Drawings.
iii. Drill rock within the excavation as required to create planes of weakness within the rock mass to facilitate excavation.

IV. MEASUREMENT AND PAYMENT:

Rock excavation and vibration monitoring and control will not be measured for separate payment but the cost thereof shall be included in the contract unit price of Structure Excavation.

ORDER NO.: L89
CONTRACT ID. NO.: C000109813C01B

VIRGINIA DEPARTMENT OF TRANSPORTATION
SPECIAL PROVISION FOR

SEEDING AND SODDING

March 20, 2017

PART 1 - GENERAL

1.02 SUMMARY

A. The work includes, but is not limited to the provision of all material, services, labor, and equipment necessary to perform the following as required per the plans for the establishment of turf, meadow grasses, and/or wildflowers:

a. Seeding
b. Sodding
c. Hydro-seeding
d. Plugging

B. In addition to these specifications, Work shall be performed as shown on the plans in accordance with the Arlington County Department of Parks & Recreation (DPR) Design Standards and available online at:

http://parks.arlingtonva.us/design-standards/

1.03 DEFINITIONS shall be in accordance with the Special Provision for Landscape Definitions.

1.04 SUBMITTALS

Submit the following to the Engineer for approval as advised by the County Landscape Architect before delivering to site:

A. Samples of all materials shall be submitted to the Project Officer for approval with confirmation by the County Landscape Architect prior to delivery to site.

B. Contractor qualifications per section 1.04 “Quality Assurance” to Engineer for approval.

C. Certifications and Samples:

A. Seed Mix: Certification of grass seed including the botanical and common name, percentage by weight of each species and variety; and percentage of purity, germination, and weed seed. Include the year of production and the date of packaging.

B. Sod: Sod grower's name, together with substantiating information as to field location from which sod is to be cut and species, percent purity and mixture of grass sod to be applied. Samples or photos of sod mix when requested.

1.05 QUALITY ASSURANCE

B. Contractor qualifications:

a. Evidence of completion of at least three (3) projects of similar nature and scope to this project completed within the last five (5) years that have resulted in successful turf and meadow establishment.

b. The Contractor shall be a member in good standing of either the Professional Landcare Network or the American Nursery and Landscape Association.

c. Experience: Three to Five years' experience in turf installation.

C. The Contractor shall maintain an experienced full-time supervisor on site when work is in progress.

PART 2 - PRODUCTS

2.01 MATERIALS

A. All materials shall conform to these specifications, unless otherwise approved in writing by the Engineer as advised by the Landscape Architect.

B. Delivery tickets indicating date, weight, product data including all analyses for purity and other information as specified, and vendor's name shall be submitted to Engineer for approval.

2.02 SEED

A. Grass seed shall be fresh, clean, dry new crop seed complying with purity and germination requirements herein. All cultivars shall be on the current "Virginia Turfgrass Variety Recommendations" or in the top 25 for transitional zone sites-overall of the latest National Turfgrass Evaluation Program (NTEP) as shown on the plans and as approved by Engineer as advised by the Landscape Architect. The Turf-type Tall Fescue component shall be comprised of a minimum of two cultivars with each cultivar comprising neither less than 30 percent nor more than 70 percent of the blend. The use of K-31 Tall Fescue or Common Kentucky Bluegrass in the mix is prohibited. The mix shall have 2.5 percent maximum inert matter, 0.5 percent maximum crop seed, and 0.1 percent maximum weed seed and 0.0 percent noxious weed. The mix shall comply with the current Virginia Seed Law and Virginia Seed Regulations, what is shown on plans, and approximate the following:

Kind of Seed	% by Weight	% Purity	% Germination
Turf-type Tall Fescue	80	97	85
Bluegrass	10	97	80
Perennial Ryegrass	10	97	90

B. Substitution of seed type or percent only on approval of Engineer as advised by Landscape Architect.

2.03 SOD

Cultivated Grass Sod shall be certified and obtained from Virginia Crop Improvement Association certified sod farms and have been grown on natural native mineral soils comparable to those at the job site. Sod containing netting is not acceptable. Failure to obtain advance approval will be grounds for rejection of all sod delivered to the site. Invoices for all sod to clearly state point of origin and have a facsimile of the Grower's Nursery Certificate issued by the U.S. Department of Agriculture or Certified Delivery Ticket for each truckload attached to them. All grass sod shall meet the following basic requirements.

a. Sod shall be free of disease and soil borne insects.

b. Sod shall be free of clover, broadleaf weeds and noxious weeds. Sod considered free of such weeds if less than 2 such plants are found per 100 square feet of area.

c. Sod shall be of uniform color and density and contain:

Kind of Seed	% by Weight
Turf Type Tall Fescue	90
Kentucky Bluegrass	10

d. All cultivars must be on the current approved list of the Virginia Turfgrass Variety Recommendations and the sod shall be certified by the Virginia Sod Certification Program. Provide appropriate certifications at the time of installation.

e. Sod sample shall be submitted to and approved by Engineer as advised by the Landscape Architect before cutting. Sod placed on the job shall conform to the approved sample or shall be removed and replaced at the Contractor's expense.

f. Sod shall have been mowed before stripping and shall have been maintained for a minimum of three months.

g. Sod shall be relatively free of thatch. Thatch build up that significantly detracts from the appearance of the sod is sufficient cause for rejection.

h. Sod shall be machine stripped at a uniform soil thickness of approximately 3/4-inch, excluding tip growth and thatch.

i. Individual pieces of sod shall be cut to supplier's standard width and length. Maximum allowable deviation from standard widths and lengths shall be 5%. Broken pads, torn or uneven ends shall not be permitted.

j. Root development shall be such that standard size pieces will support their own weight and retain their size and shape when suspended vertically from a firm grasp on uppermost 10% of the area.

k. Under moderate moisture conditions, weight shall not exceed 7 pounds per square foot. Minimum weight shall not be less than 4 lbs. per square foot.

2.04 SOILS & SOIL AMENDMENTS

Soils and soil amendment shall conform to the Special Provision for Plant Preparation.

2.05 MULCHES/ ORGANIC MATTER

Mulch shall conform to the Special Provision for Plant Preparation.

2.06 SOIL STABILIZATION/EROSION CONTROL FABRIC

Soil Stabilization/Erosion Control Fabric shall conform to the Special Provision for Plant Preparation.

PART 3 - EXECUTION

3.01 PREPARATION

Finish Grade and topsoil shall conform to the Special Provision for Plant Preparation.

3.02 SEEDING - GRASS

A. All areas within the project limits that are not shown for paving, sodding, or special treatment shall be seeded with the specified seed mix.

B. Permanent seeding shall take place from August 15th to October 15th or from March 15th to May 15th. Approval from Engineer will be required before seeding is to begin.

C. Use 4” of prepared topsoil as base for areas to be seeded.

D. No seeding shall be done during windy weather (winds over 5 mph) or when ground is wet or otherwise non-tillable. No seeding shall be done on frozen ground or when the temperature is 32 or lower.

E. Seed shall be uniformly distributed by hydro-seeding methods as specified:

Slurry

a. Seed as specified at a rate of 350 lbs/acre.
b. Mulch: virgin wood fiber type applied at a rate of 1200 lbs/acre.
c. Tackifier: Guar type or approved equal applied at a rate of 40 lbs/acre.
d. Fertilizer: 19-19-19 granular applied at a rate of 500 lbs/acre.
e. Lime: Flowable liquid lime at a rate of 5 gallons per acre.
f. Slurry shall be dyed green if dye is not included with the mulch.
g. Application rate: 3000 gallons per acre. Agitation shall be maintained throughout mixing and application.
h. Slurry shall be applied within 8 hours of the start of mixing.

F. Seed may be drilled or an alternate sowing method may be used in lieu of hydro-seeding. If an alternate method is used, seeding shall run in two directions. The second direction being at right angles to the first direction. Requests for using alternate methods shall be approved by the Engineer before applying seed.

a. Sow seed at the rate of 5 to 8 lbs/1000 sq. ft.

b. Rake seed lightly into top 1/8-inch of topsoil, roll lightly, and water with fine spray.

G. Protect seeded areas with slopes not exceeding 6:1 by spreading straw mulch. Spread uniformly at a minimum rate of 2 tons/acre to form a continuous blanket 1-1/2-inches in loose depth over seeded areas. Spread by hand, blower, or other suitable equipment.

H. Areas indicated on plan or exceeding 6:1 slope shall be protected with erosion control fabric, jute mat, or similar slope protection, installed according to manufacturer's written instruction, and/or as approved by the Engineer.

3.03 SODDING

A. All sod shall be transplanted within 24 hours from the time it is harvested unless stacked at its destination in a manner satisfactory to the Engineer. Do not lay sod if dormant or if the ground is frozen or muddy.

B. All sod in stacks shall be kept moist and protected from exposure to air and sun and from freezing. Any sod permitted to dry out may be rejected whenever, in judgment of Engineer, its survival after placing is doubtful. No payment will be made for rejected sod. No more than forty-eight hours shall lapse between cutting and planting of sod.

C. Before placing or depositing sod upon any surfaces, all shaping and redressing of such surfaces as described in Section 3.01 of the Special Provision for Planting Preparation shall be completed. The bed area for sod shall be excavated so that when the sod is installed the adjacent soil will be flush with the top of the sod root mat. Areas shall be watered lightly before the placing of sod; sod shall not be placed on dry surfaces. Completed areas to be sodded shall be a smooth, uniform, well-tilled surface true to line and cross section. Any raking required shall be done immediately before placing the sod at no additional cost to the Department.

D. No sod shall be placed at any time temperature is below 32 degrees Fahrenheit. No frozen sod shall be used and no sod shall be placed upon frozen, powder dry or excessively wet soil.

E. Use 4" of prepared topsoil as base for areas to be sodded.

F. Sod shall be lifted from trucks or storage piles by hand and placed with closed joints and no overlapping. All cracks, seams and voids shall be closed with small pieces of sod. Sod shall be sprinkled thoroughly and then tamped after laying. "Tamping" consists of firmly closing seams between strips by use of hand tampers or approved rollers. All sod shall be thoroughly rolled after closing all seams. Correct any slipping of sod.

G. Adequate water and watering equipment shall be on hand before sodding begins and sod shall be kept moist until root system adheres to prepared soil bed and becomes established and accepted by Engineer.

H. Sod shall be laid with long edges parallel to contours, except in swales or ditches where it shall be placed perpendicular to the flow line. Only sod placed in swales or ditches shall be staked using 2 stakes per roll of sod. Stakes shall be wood wedges 1/2" x 1" x 12". Successive strips to be neatly matched and all joints staggered. Sod shall be laid in all areas indicated on the plans.

3.04 PROTECTION

A. Install post and rope barriers around seeded areas. Tie cloth or ribbon to rope at 10' intervals.

B. Install "KEEP OFF LAWN" signs at appropriate locations.

C. Remove non-biodegradable erosion control measures after plant establishment period.

3.05 MAINTENANCE

A. Maintain surfaces and supply additional topsoil where necessary, including eroded areas.

B. Water to ensure uniform seed germination and to keep soil surface damp:

a. Each watering shall consist of 1 gallon per 3 sq. yd. of seed or sod.

e. Apply water slowly so that surface of soil will not puddle and crust.

C. Mow lawn areas when grass reached height of 3”. Maintain minimum height of 2”. Do not cut more than 1/3 of blade at any one mowing.

D. After first mowing of lawn, water grass sufficiently to moisten soil from 3” to 5” deep.

E. Reseed damaged grass areas showing root growth failure, deterioration, bare or thin spots, and erosion.

3.06 GUARANTEE

A. The Contractor shall maintain all sodded and seeded areas in a healthy, vigorous condition in accordance with Section 3.05 “Maintenance” at his/her own expense until all contracted work is completed and accepted by Engineer as advised by the Landscape Architect or Urban Forester.

B. The Contractor shall replace any seed or sod which has died or been damaged during the establishment period at no additional cost to the Department.

3.07 ACCEPTANCE

A. Seeded areas will be accepted when an even, healthy, close and uniform stand of turf, 3” tall, free of weeds and surface irregularities, with coverage exceeding 90 percent over any 10sq. ft. and bare spots not exceeding 4 by 4 inches is properly established. Bare spots in excess of 4” shall be re-seeded at the rate specified in section 3.02 herein.

B. Sodded areas will be accepted when sod is well established in a healthy, vigorous growing condition. Reestablish lawns that do not comply with requirements and continue maintenance until lawns are satisfactory.

C. All debris and waste material resulting from seeding/sodding/mulching activities shall be removed from the project area and disposed of upon completion. Any damaged areas shall be restored to their original condition.

D. Upon acceptance by Engineer at Final Completion, Arlington County will assume all lawn maintenance responsibilities.

PART 4 - MEASUREMENT AND PAYMENT

Seed and Mulch will be measured in square yards and will be paid for at the contract unit price square yard. This price shall include furnishing and preparing topsoil, furnishing and applying seed and mulch in accordance with the Special Provisions for Planting Preparation, watering, mowing, and performing other maintenance activities.

Sod will be measured in square yards and will be paid for at the contract unit price per square yard. This price shall include furnishing and preparing topsoil, furnishing and installing sod, watering, mowing, and performing other maintenance activities.

Payment will be made under:

Pay Item	**Pay Unit**
Seed and Mulch	Square Yard
Sod	Square Yard

ORDER NO.: L89
CONTRACT ID. NO.: C000109813C01B

VIRGINIA DEPARTMENT OF TRANSPORTATION
SPECIAL PROVISION FOR

TREE GRATE

February 23, 2017

I DESCRIPTION

This work shall consist of furnishing and installing tree grates and angle frames as shown on the plans, in accordance with these specifications, and as directed by the Engineer.

II MATERIALS

Tree Grates shall be 48”x120”, Model: STARBURST-2 48X120 inch RECTANGULAR Model 12004-2 with 26 inch tree opening. Tree grates and frames shall be as supplied by IRONSMITH, Inc., 41-701 Corporate Way, Unit 3, Palm Desert, CA 92260 (800) 338-4766, Neenah Enterprises, Inc., US Foundry, or approved equal.

Tree grates shall be cast gray iron from 100% recycled material. All tree grate castings shall be manufactured true to pattern and component parts, and shall fit together in a satisfactory manner. The castings shall be of uniform pattern and quality, free from blowholes, hard spots, shrinkage, distortion or other defects. Castings shall be cleaned by shot blasting.

Color shall be black.

III PROCEDURES

The Contractor shall submit product shop drawings, including overall dimensions and options, to the Engineer for approval before purchase and installation.

Installation shall be per the manufacturers recommendations.

IV MEASUREMENT AND PAYMENT

Tree Grate will be measured in units of each and will be paid for at the contract unit price per each. This price shall include fabricating, furnishing, and installing tree grate and angle frame.

Payment will be made under:

Pay Item	Pay Unit
Tree Grate	Each

ORDER NO.: L89
CONTRACT ID. NO.: C000109813C01B

VIRGINIA DEPARTMENT OF TRANSPORTATION
SPECIAL PROVISION FOR

TREE PROTECTION

February 24, 2017

PART 2 - GENERAL

1.01 SUMMARY

A. This work shall include protecting existing trees to remain by furnishing, installing, and removing tree protection fence; pruning in accordance with these specifications, according to the specifications, and as directed by the Engineer.

B. In addition to the specifications herein, the work shall be performed in accordance with the plans per Arlington County Department of Parks & Recreation Design Standards for Tree Protection and Trimming available online at:

http://parks.arlingtonva.us/design-standards/

1.02 DEFINITIONS shall be in accordance with the Special Provision for Landscape Definitions.

1.03 SUBMITTALS

Submit the following to the Engineer:

A. Product Data for each product type indicated in Section 2.0 that will be used on the project.

B. Certification, from Contractor's arborist, that trees indicated to remain have been protected during construction according to recognized standards and that trees were promptly and properly treated and repaired when damaged.

C. Maintenance plan for care and protection of trees affected by construction during and after completing the work from Contractor's arborist.

D. A copy of valid International Society of Arboriculture (ISA) arborist certification to the Engineer for approval as advised by Urban Forester.

E. List products and firms to be used, including qualifications to perform work.

F. Provide schedules for performance of work.

1.04 QUALITY ASSURANCE

A. The Contractor shall obtain the services of an arborist Certified by ISA to implement tree and plant protection methods. Provide ISA certification verification to Engineer per section 1.03 "Submittals" before beginning work.

B. The Contractor shall identify to the Engineer at least one authorized on-site Point of Contact(POC) who is, by training or experience, familiar with the policies, regulations and standards applicable to the work being performed. The POC and the certified arborist may be the same individual.

C. Crews shall be directly supervised by an ISA certified arborist.

D. All workers shall be familiar with the technical aspects of arboricultural work and equipment used in such operations through related training and on the job experience.

E. Trucks and mechanized equipment shall not enter tree protection areas.

F. Stump grinding shall be in accordance with the Special Provision Copied Note for Section 601.02 herein.

G. Stump grinding shall not be performed within tree protection areas.

H. All work in or near tree protection areas shall be carefully performed by Contractor in order to avoid damage to tree trunks, branches, root system, and other existing plant materials and soils that are to remain.

I. Silt shall not be allowed to collect in preservation areas. Silt accumulating in preservation areas shall constitute damage and requires remedial activity. All silt shall be removed from preservation areas within 24 hours of siltation. The methods and procedures for silt removal within tree preservation areas shall be approved by the Engineer as advised by the Urban Forester.

J. Tree Pruning Standard: Comply with ANSI A300 (Part 1), "Tree, Shrub, and Other Woody Plant Maintenance--Standard Practices (Pruning)."

   a. Pruning shall remove only dead, dying, damaged, or broken limbs greater than 1” – 1.5” in diameter.

   b. Pruning for clearance shall be reviewed and approved by Engineer as advised by the Urban Forester.

K. The Contractor shall notify the Engineer 72 hours before the following events, so that the County’s Urban Forester can be notified and present at a pre-construction site meeting (refer to Section 3) and to observe work:

   a. Tree protection fencing installation

   b. Tree or root-pruning operations.

   c. Work within tree protection zones.

   d. Tree planting.

PART 2 – PRODUCTS

MATERIALS

A. Temporary Tree Protection Fence, unless otherwise indicated in approved plans, shall be two-inch wire mesh fabric measuring 48-inches in height mounted on 2” O.D. steel pipes driven 24-inches into the ground, placed 120-inches on-center maximum. Refer to Arlington County DPR standard detail on the plans.

B. Tree Protection Signs shall be of heavy-duty sheet aluminum or weatherproof plastic material measuring 12-inches by 18-inches. Signs shall state “NO ENTRY, TREE PROTECTION AREA, CALL 703-228-6557 TO REPORT VIOLATIONS” in both English and Spanish. Signs shall be mounted on fence every 30 feet maximum.

C. Topsoil and Shredded Hardwood Mulch shall conform to the Special Provision for Planting Preparation.

PART 3 - EXECUTION

3.01 PREPARATION

A. Before the construction activities, the Contractor shall meet on-site with the Engineer and Urban Forester to review trees to remain and protective measures required.

B. The Contractor shall install temporary tree protection fencing and signs around tree protection zones. Maintain temporary fence and remove when construction is complete after approval by Engineer as advised by the County Urban Forester.

C. Protect tree root systems from damage caused by runoff or noxious materials spills while mixing, placing, or storing construction materials. Protect root systems from ponding, eroding, or excessive wetting caused by dewatering operations.

D. No personnel, vehicles, equipment, construction materials, or construction debris shall be allowed inside the tree protection areas at any time during construction without written approval from the Engineer as advised by the Urban Forester. If a violation is observed, the Contractor will be notified by the Engineer and shall immediately rectify the situation.

E. Special Demolition Procedures:

   a. Demolition of walks and hardscape within tree protection areas shall be directly supervised by an ISA certified arborist.

   b. Mechanized equipment shall not enter tree protection areas (TPAs) or reforestation areas.

   c. Backfill voids created by demolition within the TPAs with loosely placed topsoil. Only the amount of topsoil necessary to fill the void without spreading over existing grades shall be allowed.

3.02 EXCAVATION

A. Install shoring or other protective support systems to minimize sloping or benching of excavations if shown on the plans.

B. Do not excavate within tree protection zones, unless otherwise indicated.

C. Where utility trenches are required within tree protection zones, the Contractor shall perform root pruning before trenching and only as directed by the Engineer.

D. Where excavation is proposed within the critical root zone of trees to remain, the Contractor shall perform root pruning as indicated in approved plans before excavation and only as directed by the Engineer.

E. Where new finish grade is indicated below existing grade around trees, Contractor shall slope grade outside of tree protection zones. Maintain existing grades within tree protection zones.

3.04 TREE REPAIR AND REPLACEMENT

A. Repair trees damaged by construction operations within 24 hours. Treat damaged trunks, limbs, and roots as directed in writing by the Engineer as advised by the Arlington County Urban Forester.

B. The Contractor shall be responsible for any damage to trees within the Tree Protection Area caused by the Contractor's personnel, vehicles, or equipment at the site. Any damage to a tree to remain shall result in a deduction from the monthly progress estimate due the Contractor following the damage in the amount of damage based on the latest edition of the Council of Tree and Landscape Appraisers Guide for Plant Appraisal published by the International Society of Arboriculture (ISA). All trees shall be valued as landscape trees.

3.05 DISPOSAL OF WASTE MATERIALS

A. Burning is not permitted.

B. Disposal: Remove from the project and dispose of excess excavated material and displaced trees.

PART 4 – MEASUREMENT AND PAYMENT

Tree Protection Fence will be measured in linear feet and will be paid for at the contract unit price per linear foot. This price shall include furnishing, installing, maintaining, and removing fence, posts, and signs after project completion.

Payment will be made under:

Pay Item	Pay Unit
Tree Protection Fence (4' Height)	Linear Foot

ORDER NO.: L89
CONTRACT ID. NO.: C000109813C01B

VIRGINIA DEPARTMENT OF TRANSPORTATION
SPECIAL PROVISION FOR

VERIFYING EXISTING UTILITY LOCATIONS

August 3, 2017

I. DESCRIPTION

This work shall consist of digging test holes where the existing Arlington County fiber optic lines cross a proposed drainage pipe for the purpose of verifying the vertical location of the existing Arlington County underground fiber optic line.

The the existing fiber optic line locations shown on the Plans is approximate. The Engineer has estimated ten (10) separate locations where the existing Arlington County fiber optic line crosses a proposed drainage pipe. The Arlington County's fiber optic line shall be located horizontally by Miss Utility and the Contractor shall dig test holes to verify the vertical location of the fiber optic line.

II. MATERIALS

Earthen material and aggregate material used to backfill test holes shall be the same quality as existing material, unless otherwise approved or directed by the Engineer.

Asphalt concrete pavement patching shall be Hot Mix Asphalt conforming to Section 211 of the Specifications. When weather prohibits placement of Hot Mix Asphalt, the Contractor may use the following when approved by the Engineer:

Alternate Asphalt patching material shall be a Type I or Type II product from the pre- approved products list for Cold Mix Asphalt Patching Material. The Contractor will submit product documentation for review by the Engineer.

Hydraulic cement concrete shall conform to Section 217 of the Specifications.

III. PROCEDURES

Each test hole shall be sufficient diameter and depth to confirm the presence of absence of an existing utility. Each hole is not anticipated to be greater than 4 feet in depth and at a diameter necessary to easily verify the type and condition of the utilities. If directed by the Engineer to, the Contractor shall dig deeper than 4 feet. The Contractor shall provide all excavation support necessary to protect workers and conditions adjacent to the test holes. The Contractor shall backfill and compact each hole in accordance with Section 303 of the Specifications.

The Contractor shall prepare and present a written, signed report to the Engineer at the conclusion of each day's work. The report shall list the approximate location, depth from existing grade, and diameter of each test hole completed that day; as well as the approximate location, depth, and nature of all utilities encountered.

The Contractor shall coordinate the Miss Utility services, Arlington County, and the Department prior to starting work.

Test holes for the fiber optic lines are not the only utility confirmation excavations to be performed by the Contractor. The Contractor shall take all necessary precautions to prevent disturbance of the utility facilities in accordance with Section 105.08 of the Specifications.

The Contractor shall install a RFID marker ball programmed by the Department to reflect the utility owner and the depth of the utility in each test pit. The ball markers will be placed during the backfill operation of the facility with a 3' minimum cover for roadway applications and a 5' maximum depth. The marker balls will be provided by the Department and programmed by the Department for placement in the test pits.

The Contractor shall patch the resulting excavation as directed by the Engineer. Asphalt concrete pavement shall be repaired with a hot mix asphalt material. Hydraulic cement concrete pavement shall be repaired with hydraulic cement concrete from the Materials Division Approved Products List. Asphalt patching material and hydraulic cement concrete shall be installed flush with the surrounding pavement when the cavity is filled and compacted as required. The Contractor shall remove and dispose of all debris.

IV. METHOD OF MEASUREMENT AND BASIS OF PAYMENT

Utility Test Hole will be measured in units of each per location and type of surface encountered and will be paid at the contract unit price per each. This price shall include digging, furnishing backfill and batching materials, and backfilling and compacting hole. If directed by the Engineer to dig deeper than 4 feet, the Contractor will be paid an additional 25% per additional foot. Traffic control, if required, will be paid separately.

Payment will be made under:

Pay Item	Pay Unit
Utility Test Hole, in asphalt concrete paved areas	Each
Utility Test Hole, in non-paved areas	Each
Utility Test Hole, in hydraulic cement concrete paved areas	Each

ORDER NO.: L89
CONTRACT ID. NO.: C000109813C01B

VIRGINIA DEPARTMENT OF TRANSPORTATION
SPECIAL PROVISION FOR

STREETLIGHT CONSTRUCTION

March 15, 2017

1. Description

This work shall consist of furnishing and installing or modifying streetlights and related equipment and electrical systems in accordance with these specifications, as shown on the plans or as directed by the Engineer.

2. Lead Worker / Foreman

A separate Lead Worker / Foreman shall be assigned to each project. The individual shall have at least 5 years of experience in streetlight construction and installation. The Contractor shall submit documentation of Lead Worker / Foreman's experience and that of his or her replacement(s) to the Engineer for approval before work on the project begins.

3. Inspections

The Contractor shall contact the Engineer at least 5 days in advance to schedule inspections and final acceptance. The Engineer will inspect all underground conduits before back filling, pole foundations, and electrical work. Streetlight acceptance will occur after inspection, when Contractor demonstrates that all lights are operational; and the Contractor provides as-built plans for the lighting system.

4. Contact Information

Arlington County Government
Division of Transportation
Transportation Engineering and Operations
2100 Clarendon Boulevard
Courthouse Plaza #1, Suite 900
Arlington, Virginia 22201
Phone: 703-228-6570

5. As-Built Drawings

a. As built plans shall indicate the location of the meter pedestal and control circuit. In addition, the plan notes shall indicate the following:

   (1) The number of circuits used.

   (2) The size of circuit breaker used for each circuit.

   (3) The size and type of wire used.

   (4) A statement as to which circuit controls each light.

   (5) EXAMPLE: Circuit #1 – 20 amp - (3) #6 AWG wire marked with red tape – Feeding lights 1,3,5,7.

b. As-built drawings shall be submitted in AutoCAD and Adobe (.pdf) format to the Engineer. A sample as-built drawing is on drawing LT-18.

6. Acronyms and Abbreviations

Hz	hertz
V	volt
VA	volt-ampere
VAC	volts alternating current
W	watt
AASHTO	American Association of State Highway and Transportation Officials
AC	alternating current
ANSI	American National Standards Institute
ASTM	ASTM International
AWG	American Wire Gauge
County	Arlington County, VA
EIA	Electronic Industries Alliance
IES	Illuminating Engineering Society
IMSA	International Municipal Signal Association
LED	light-emitting diode
NEC	National Electrical Code
NEMA	National Electrical Manufacturers Association
PVC	polyvinyl chloride
USE	Underground Service Entrance
UL	Underwriters Laboratories
VDOT	Virginia Department of Transportation

ORDER NO.: L89
CONTRACT ID. NO.: C000109813C01B

VIRGINIA DEPARTMENT OF TRANSPORTATION
SPECIAL PROVISION FOR

STREETLIGHT FOUNDATIONS

August 3, 2017

1 Description

This work shall consist of furnishing and installing foundations in accordance with these specifications, as shown on the plans, or as directed by the Engineer.

2. County Standards

The applicable foundation drawings are as follows:

(a) Ornamental Pole Foundation Type F-1-Detail

(b) LT-9.1 Breakaway Support System for Light Poles Details

(c) LT-9.2 Breakaway Support System for Light Poles Details

(d) Streetlight Foundation Offset Detail – Curb Edge

(e) In-grass Streetlight Foundation Offset Detail

(f) Typical Street Lighting Wiring Diagram

(g) Carlyle Pole Foundation on Bridge

3. General

Foundations for streetlight poles shall be in accordance with Arlington County Virginia Department of Environmental Services Traffic Signal & Streetlight Specifications and details on the Streetlight Drawings unless otherwise directed by the Engineer before construction.

4. Materials

(a) Concrete shall be Class A-3 conforming to Section 217 of the Specifications.

(b) Anchor Bolts specifications are shown in the Arlington County Department of Environmental Services Construction Standards and Specifications. If not found in the manual, the information will be either be shown on the streetlight plan or be provided by the pole vendor or the Engineer. The Contractor shall provide manufacturer's certification for anchor bolts.

(c) Anchor bolts shall be galvanized.

5. Execution

(a) Concrete shall be mixed in accordance with Section 217 of the Specifications and formed, poured, and cured in accordance with Section 404 of the Specifications.

(b) All foundations shall be hand floated until the top is smooth and level.

(c) Streetlight foundations shall include two (2) 2" PVC conduits and one (1) 1" PVC conduit.

(d) Pole foundations shall be poured against undisturbed earth.

6. Measurement and Payment

Foundations will be measured in units of each or cubic yards and will be paid for at the contract unit price per each or cubic yards as applicable for the standard, type, and size designated. When paid for in cubic yards of concrete, no payment will be made for concrete in excess of the cubic yards of concrete required by the approved foundation design unless otherwise authorized by the Engineer. When authorized by the Engineer, the additional concrete will be paid for in cubic yards at the invoice material cost only. This price shall include foundation design, furnishing and installing concrete, reinforcing steel, stub poles, anchor bolts, bolt circle templates, grounding equipment, and conduits; excavating, backfilling, compacting, disposing of surplus and unsuitable materials, and restoring existing areas. Removal and replacement of existing concrete, asphalt, or brick sidewalk and/or pavement due to installation shall be incidental to the concrete foundation Item.

All reinforcement shall be incidental to the pay item for which a foundation is required. Ground rods shall be provided as indicated in the standard details and shall be incidental to the foundation pay item.

Payment will be made under:

Pay Item	Pay Unit
Concrete Foundation F-1	Each or Cubic Yard

ORDER NO.: L89
CONTRACT ID. NO.: C000109813C01B

VIRGINIA DEPARTMENT OF TRANSPORTATION
SPECIAL PROVISION FOR

STREETLIGHT JUNCTION BOXES

August 3, 2017

1 Description

This work shall consist of furnishing and installing junction boxes in accordance with these specifications, as shown on the plans, or as directed by the Engineer.

2. County Standards

The applicable junction boxes drawings are as follows:

(a) Junction Box – Small Detail

(b) Junction Box – Large Detail

3. Materials

(a) Small junction boxes shall be 12”X12” Quazite PC1212HA00 (lid) and PC1212BA12 (box).

(b) Large junction boxes shall be 13”X24” Quazite PT1324HA00 (lid) and PT1324BA18 (box).

(c) The covers shall have “STREETLIGHT”, “PUBLIC ART”, OR “TRANSIT” stamped on as indicated on the plans.

4. Execution

The Contractor shall provide the specified box, any required excavation to install the box, install required conduits into the box, and patch conduit entrance holes.

(a) All conduits entering a junction box shall enter the box perpendicular to the box wall at the entry point.

(b) Conduits shall turn up and under through the bottom of the structure and extend a minimum of 2 inches and a maximum of 3 inches into the structure.

(c) All junction boxes shall be set on washed gravel with a minimum depth of 12 inches.

(d) The top of the junction box shall be installed flush with the grade unless otherwise specified.

(e) All connections to ground rods shall be accomplished through an exothermic welding process.

(f) A 5/8"x 8' copper clad grounding rod shall be installed in each junction box.

(g) Conductor cables shall be installed with their slack length coiled in junction boxes. The coiled length shall be sufficient to allow cables to extend at least 4 feet above the junction box.

5. Measurement and Payment

Junction boxes will be measured in units of each and will be paid for at the contract unit price per each. This price shall include furnishing and installing frame and cover, ground rod, parging, gravel base, and ground wire. Restoring damaged grass, paver, concrete, asphalt, or other areas shall be incidental to the junction box cost.

Payment will be made under:

Pay Item	Pay Unit
Junction Box (Size)	Each

ORDER NO.: L89
CONTRACT ID. NO.: C000109813C01B

VIRGINIA DEPARTMENT OF TRANSPORTATION
SPECIAL PROVISION FOR

UNDERGROUND CONDUCTOR

March 27, 2017

1. Description

This work shall consist of furnishing and installing underground conductors in accordance with these specifications, as shown on the plans, or as directed by the Engineer.

2 Materials

(a) Conductors for Streetlights from the branch circuit breakers to the base of each streetlight pole shall be copper and shall meet the requirements of ASTM B3 and ASTM B8.

(1) Conductor shall be Type XHHW insulation and be UL approved.

(2) Unless otherwise specified by the Engineer, underground conductor shall be the size as indicated on plans (unless otherwise directed by Engineer).

(3) Conductor size shall be confirmed based on load and voltage drop calculations, in accordance with the NEC.

(4) There will be five conductors with two phases (A & B), two neutrals, and one ground. The conductors shall be colored as follows:

i. Circuit A Black

ii. Circuit B Red

iii. Neutral White

iv. Ground Green

(b) Service entrance cables will be provided by Dominion Virginia Power.

(c) All fuse holders shall be breakaway receptacles for impact disconnect 10 amps by Ferraz Shawmut model number FEB-11-11 or approved equal.

3. Execution

The Contractor shall provide and run conductors in conduits, inside junction boxes and poles and arms. The work will also include making necessary circuit connections to new wires or existing wires, securing terminals with weather proof splices that meet ANSI Cll9.4 requirements.

(a) All conductors shall be installed in a neat and workmanlike manner, without kinking, scarring, or damaging conductors during installation.

(b) All branch circuit, load and service wires shall be color coded in accordance with NEC and the County requirements.

(c) At least 6 inches of free conductor shall be left in each outlet or junction box for making up joints and making connections to fixtures, devices, or equipment.

(d) Conductors shall be continuous from outlet to outlet, and no splices shall be made except within outlet or junction boxes.

(e) Conductors shall be pulled by hand and without aid of block and tackle or any other mechanical devices.

(f) Only approved pulling compounds which will in no way damage the insulation on the conductors or hasten its aging may be used to facilitate the pulling of wire into conduit.

(g) Where several feeders pass through a common junction box, the feeders shall be tagged to indicate clearly their electrical characteristics, circuit number, and panel designation. The same information shall be permanently marked on the cover of the box.

(h) Underground conductor shall be pulled from pole to pole in the underground duct.

(i) The wiring for the luminaires shall be installed two circuits alternating. For example, sixteen (16) poles shall be installed as follows:

(1) Luminaire Numbers 1, 3, 5, 7, 9, 11, 13 and 15 shall be installed on A circuit, and

(2) Luminaire Numbers 2, 4, 6, 8, 10, 12, 14 and 16 shall be installed on the B circuit and alternate circuit.

(j) The in-pole wire shall be no smaller than #12 AWG copper stranded wire, and shall be spliced to the luminaire terminal block at the upper end, and the service conductors in the base of the pole.

(k) An approved breakaway fuse shall be wired in the hot leg of each light pole. The wiring device used to make the connection must be approved for both aluminum and copper wires.

(l) A continuous grounding conductor shall be installed for grounding purposes.

(m) All conduits, anchor bolts, and reinforcing bar cages shall be made mechanically secure and bonded to the pole to form the grounding electrode system. An 8'x 5/8" copper ground rod shall be installed to supplement the grounding electrode system. A 10’ x 5/8” ground rod shall be installed inside the pole foundation when no junction box is available. A non-conducting sleeve shall be installed in the foundation to ensure the ground rod does not contact the concrete. A ground rod shall also be installed in the junction box adjacent to the service equipment.

4. Measurement and Payment

(Size) AWG Stranded Cu Conductors will be measured in linear feet and will be paid for at the contract unit price per linear foot. This price shall include furnishing and installing ground rods, exothermic welds, cable terminations, and labeling.

Payment will be made under:

Pay Item	**Pay Unit**
(Size) AWG Stranded Cu Conductor	Linear Foot

ORDER NO.: L89
CONTRACT ID. NO.: C000109813C01B

VIRGINIA DEPARTMENT OF TRANSPORTATION
SPECIAL PROVISION FOR

STREETLIGHT CONDUIT

March 15, 2017

1. Description

This work shall consist of furnishing and installing conduit in accordance with these specifications, as shown on the plans, or as directed by the Engineer.

2 Materials

(a) PVC Conduit shall be schedule 40 or schedule 80 as shown on the plans or as directed by the Engineer. All couplings, elbows, bushings and other conduit fittings shall be of the same quality, strength, and grade of workmanship as the conduit and shall be manufactured expressly for use with the conduit.

(b) Non-metallic expansion/deflection couplings shall provide axial or parallel deflection of up to 3/4" and angular deflection of up to 30 degrees from relaxed position. Thomas & Betts model no. XD6NM-TB or approved equal.

3. Execution

(a) General Conduit Installation

(1) Where multiple conduits are installed in a single trench the conduits shall be separated by 1 inch of sand or with prefabricated conduit spacing units.

(2) Change in direction of conduit shall be accomplished by the use of standard elbows or field bends. All bends shall conform to NEC Article 347 for rigid non-metallic conduit.

(3) There shall not be more than the equivalent of four quarter bends (360 degrees total) between pull points, e.g., conduit bodies and boxes.

(4) The ends of the conduit shall be reamed to remove burrs and rough edges.

(5) Cuts shall be made square and true so that the ends will butt or come together for the full circumference thereof.

(6) 500-lb test strength nylon pull line shall be installed in all conduits.

(7) Conduits for communication service for Bus Shelters shall be terminated with a sweep at the inside rear corner of the shelter. Conduit shall protrude no more than 3 inches above finished grade. The Contractor shall determine the location of the sweep such that it corresponds to the correct location of final shelter placement. Conduits for electrical service for Bus Shelters shall be terminated as indicated on the Drawings.

(b) Trenching

(1) Conduit shall be placed at a minimum depth of 24 inches and a maximum depth of 36 inches within Arlington County right-of-ways. All conduits within VDOT right-of-ways shall be buried with a minimum of 36 inches of cover.

(2) All trenching shall conform to Section 303 of the Specifications and the Restoring Existing Pavement Special Provision.

(3) Trenches shall be free of cinders, broken concrete, or other hard abrasive materials before conduit placement.

(4) The Contractor shall take measures to preserve the existing landscaping.

(5) When trenching in earth the Contractor shall carefully remove the existing sod and then place the existing sod back into place when the work is complete. The Contractor shall place all earth that has been dug up on a plastic sheet to protect the existing landscaping.

(6) The Contractor shall completely restore the trench at the end of every working day. This includes back-filling, compaction, and placing the sod.

(c) Boring

Boring work shall involve boring runs from 30 to 100 feet (typical) or more in length. The Contractor may choose to use the directional bore method instead of trenching and back-filling. Boring may be under asphalt pavement, concrete sidewalk, or grass area.

(d) Non-metallic expansion/deflection couplings shall be installed according to manufacturer's published instructions.

4. Measurement and Payment

Conduit will be measured in linear feet and will be paid at the contract price per linear-foot. This price shall include furnishing and installing conduit, conduit bodies, fittings, bonding systems, pull ropes, pull tapes, plastic spacers, junction or splice boxes with an area of 512 cubic inches or less, supports, aggregate, trenching, boring, and protective metal shields. The cost of restoration shall be considered incidental and included in the unit cost. Restoration shall include, but shall not be limited to, concrete work, asphalt repair, pavers, and sod. Replacement of concrete and asphalt due to boring or trenching shall be incidental to the cost of installing the conduit. The price shall also include restoring existing surfaces, including but not limited to, concrete work, asphalt repair, pavers, and sod. Replacing concrete and asphalt due to boring or trenching shall be incidental to the cost of installing the conduit.

Non-metallic expansion/deflection couplings will be measured in units of each and will be paid for at the contract unit price per each. This price shall include furnishing and installing.

Payment will be made under:

Pay Item	**Pay Unit**
2" PVC Schedule 40 Conduit	Linear Foot
Non-metallic expansion/deflection coupling	Each

ORDER NO.: L89
CONTRACT ID. NO.: C000109813C01B

VIRGINIA DEPARTMENT OF TRANSPORTATION
SPECIAL PROVISION FOR

STREETLIGHT, PUBLIC ART, AND BUS SHELTER ELECTRICAL SERVICE

April 26, 2017

1 Description

This work shall consist of furnishing and installing streetlight, public art, and bus shelter electrical service in accordance with these specifications, as shown on the plans, or as directed by the Engineer.

2. Materials

Meter Pedestals shall be Midwest Company model number R281C1P6H or R208CP6HP (Both with 200 amp main breakers and 5th jaw) and no substitutions will be allowed.

3. Execution

(a) A shorting cap shall be installed in luminaire photo control sockets. Photo control shall be achieved through the LED Sentinel Wireless System in the luminaire drivers/light engines. Coordinate with Arlington County for programming.

1. The Contractor shall install the electric meter pedestal.

2. Dominion Virginia Power will provide all cable necessary for the line side electrical service installation. The ends of each wire shall be treated with an anti-oxidation compound.

3. The load side wires shall be copper and shall meet the requirements of ASTM B3 and B8. Minimum size shall be #6 AWG and shall be stranded. Wire shall be type XHHW and UL Listed.

(b) Meter Pedestal

1. The line side wires will be provided by Dominion Virginia Power. The ends of each wire shall be treated with an anti-oxidation compound such as DE-OX. The load side wires shall be copper and shall meet the requirements of ASTM B6 and B8. Size shall be as indicated on the plans. Wire shall be type XHHW and UL Listed.

2. The circuit breakers used shall be based on the calculated load of the streetlight circuit.

(c) The Contractor shall arrange for the electrical service and install all components of the service. Metered services shall be directly coordinated with Dominion Virginia Power.

(d) <u>If the of the meter and disconnect switch location is not shown on the plans, the Contractor shall submit the proposed location to the Engineer for approval at the Pre-Construction conference.</u>

(e) The ground for the electric service shall be isolated from the building ground.

(f) The service shall be three-wire 120/240 and a minimum of 100 Amps for overhead service and a minimum of 200 Amps for underground service.

4. Measurement and Payment

Electrical Services will be measured in units of each and will be paid for at the contract unit price per each. This price shall include furnishing, installing, and wiring.

Payment will be made under:

Pay Item	Pay Unit
Electrical Service	Each

ORDER NO.: L89
CONTRACT ID. NO.: C000109813C01B

VIRGINIA DEPARTMENT OF TRANSPORTATION
SPECIAL PROVISION FOR

PUBLIC ART CONTROLLER CABINET

March 27, 2017

1 Description

This work shall consist of obtaining from the Public Art Lighting Consultant and installing the public art controller cabinet in accordance with these specifications, as shown on the plans, or as directed by the Engineer.

2 Materials

Public Art Controller Cabinet will be furnished by the Public Art Lighting Consultant. Contractor shall provide concrete foundation for cabinet. Concrete shall be Class A-3 conforming to Section 217 of the Specifications.

3 Execution

Public Art Controller Cabinet: This work shall involve coordinating with the Public Art Lighting Consultant pickup and transporting the controller cabinet. Cabinet shall be mounted on a concrete foundation and secured with anchor bolts. Concrete foundation shall extend minimum 3 inches on all sides of cabinet enclosure, minimum 3 inches high above grade level, and minimum 6 inches deep below grade level. Concrete foundation shall have minimum 1 inch slope from edge of cabinet enclosure to edge of foundation. Concrete shall be mixed in accordance with Section 217 of the Specifications and formed, poured, and cured in accordance with Section 404 of the Specifications. Conduits to Public Art meter pedestal and Public Art luminous bodies shall be stubbed up 3 inches above the top of the concrete foundation. Coordinate stub up locations with Public Art Lighting Consultant.

4 Measurement and Payment

Public Art Controller Cabinet will be measured in units of each and will be paid for at the contract unit price per each. This price shall include furnishing and installing reinforcing steel, anchor bolts, and concrete for controller cabinet foundation and picking up, transporting and installing Public Art Controller Cabinet.

Payment will be made under:

Pay Item	Pay Unit
Public Art Controller Cabinet	Each

ORDER NO.: L89
CONTRACT ID. NO.: C000109813C01B

VIRGINIA DEPARTMENT OF TRANSPORTATION
SPECIAL PROVISION FOR

STREETLIGHT POLE

August 3, 2017

1. Description

This work shall consist of furnishing, installing, and wiring streetlight poles in accordance with these specifications, as shown on the plans, or as directed by the Engineer.

2. County Standards

The applicable streetlight pole installation and wiring drawings are as follows:

(a) Type PT. Dual Ornamental Aluminum Lighting Standard

(b) Type PT. Single Ornamental Aluminum Lighting Standard

(c) LT-9.1 Breakaway Support System for Light Poles Details

(d) LT-9.2 Breakaway Support System for Light Poles Details

(e) Typical Street Lighting Wiring Detail

3. Execution

Foundation mounted Streetlight Pole: This work shall involve furnishing the streetlight pole, running the wires to the pole to make ready for fixture installation, setting the pole and back filling, installing a breakaway fuse (10 amp) in the pole base and connecting all wires necessary.

The Contractor shall also trim all tree branches up to a height of 20 feet and maintain a clear width of 5 feet from all light fixtures.

4. Measurement and Payment

Install Carlyle Aluminum Poles will be measured in units of each and will be paid for at the contract unit price per each. This price shall include installing the pole, furnishing and installing wire, breakaway fuse, wire termination, and restoration.

Payment will be made under:

Pay Item	Pay Unit
Install Carlyle Aluminum Pole	Each

ORDER NO.: L89
CONTRACT ID. NO.: C000109813C01B

VIRGINIA DEPARTMENT OF TRANSPORTATION
SPECIAL PROVISION FOR

STREETLIGHT LUMINAIRES

August 3, 2017

1 Description

This work shall consist of furnishing and installing streetlight luminaires in accordance with these specifications, as shown on the plans, or as directed by the Engineer.

2. County Standards

The applicable luminaire installation and wiring drawing is:

(a) Type PT. Dual Ornamental Aluminum Lighting Standard

(b) Type PT. Single Ornamental Aluminum Lighting Standard

(c) Ornamental Cast Aluminum Twin Luminaire Arm Design Number N1059-Y1

3. Materials

(a) Type CH Cobra LED will be Philip Lumec Roadstar catalog number GPLM-180W98LED4K-ES-LE3-120-BL-[CDMG-016]-PH8-USA-WB7 with color option Textured Black (BKTX).

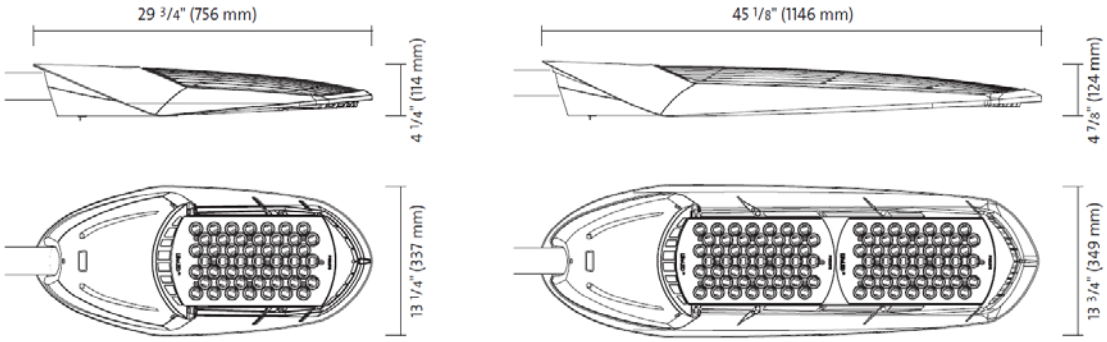

GPLS
EPA: 0.76 sq. ft.
Weight: 20 lbs (9.1 kg)

GPLM
EPA: 1.10 sq. ft.
Weight: 31 lbs (14.1 kg)

(b) Type PT. Dual shall be:

1. Two (2) Luminaires: Philips Hadco catalog number S9033 with specular aluminum full top reflector, without ballast, lamp, and socket

2. Two (2) LED Light Engines: Relume Technologies catalog number UAG S323 D5 CW UL S

3. Two (2) Drivers: Advance Xitanium catalog number LED-INTA-700C-140-F30

4. Twin Luminare Arm: Union Metal Corp. catalog number N1059-Y1

(c) Type PT. Single shall be:

1. Luminaire: Philips Hadco catalog number S9033 with specular aluminum full top reflector, without ballast, lamp, and socket

2. LED Light Engine: Relume Technologies catalog number UAG S323 D5 CW UL S

3. Driver: Advance Xitanium catalog number LED-INTA-700C-140-F30

4. Execution

(a) Type CH: This task consists of furnishing luminaire to Traffic Signal Contractor for installation and electrical connections by Traffic Signal Contractor.

(b) Type PT Dual: This task consists of providing luminaire assembly, including mounting luminaire assembly on pole and making all necessary electrical connections. Where noted on plans, furnish luminaire assembly to Traffic Signal Contractor for installation and electric connections.

(c) Type PT Single: This task consists of providing luminaire assembly, including mounting luminaire assembly on pole and making all necessary electrical connections. Where noted on plans, furnish luminaire assembly to Traffic Signal Contractor for installation and electric connections.

5. Measurement and Payment

Luminaires (Type) will be measured in units of each and will be paid for at the contract unit price per each. This price shall include furnishing, installing, and wiring luminaires on streetlight poles or furnishing to Traffic Signal Contractor for installation as designated on the plans.

Payment will be made under:

Pay Item	Pay Unit
Luminaire (Type)	Each

ORDER NO.: L89
CONTRACT ID. NO.: C000109813C01B

VIRGINIA DEPARTMENT OF TRANSPORTATION
SPECIAL PROVISION FOR

TRAFFIC SIGNAL INSTALLATION

March 14, 2017

1. Description

This work shall consist of furnishing and installing or modifying traffic signal structures and related equipment and electrical systems in accordance with these specifications, as shown on the plans or as directed by the Engineer. This specification also covers removing and salvaging or removing and disposing of existing traffic signal components.

2. Reference Documents

All equipment and material shall conform to the standards of the following:

Institute of Transportation Engineers

International Municipal Signal Association (IMSA)

Road and Bridge Specifications, Virginia Department of Transportation (VDOT)

Virginia Professional Excavator's Manual, April 2014

American Association of State Highway and Transportation Officials (AASHTO) Standard Specifications for Structural Supports for Highway Signs, Luminaires, and Traffic Signals, latest edition

VDOT Instructional and Informational Memorandum, Structure and Bridge Division (IIM-S&B)-90.2, VDOT Guidelines to AASHTO Standard Specifications for Structural Supports for Highway Signs, Luminaires, and Traffic Signals, 6th Edition, 2013 with 2015 interims

2009 Manual on Uniform Traffic Control Devices (MUTCD), Federal Highway Administration

American Welding Society (AWS) D1.1, Structural Welding Code

In addition to the requirements of the above specifications, the plans, standard details, special contract provisions, and all material and work shall conform to the requirements in the following:

Virginia Supplement to the 2009 Manual on Uniform Traffic Control Devices for Streets and Highways (MUTCD), Revision 1

National Fire Protection Association (NFPA) 70, National Electrical Code (NEC)

Institute of Electrical and Electronics Engineers (IEEE) C2-2017, National Electrical Safety Code (NESC)

Rules for Overhead Electrical Line Construction of the Virginia Public Utilities Commission (Rules)

Standards of the American Society for Testing and Materials (ASTM) International (ASTM)

Standards of the American National Standards Institute (ANSI)

Arlington County Department of Environmental Services Construction Standards and Specifications

Arlington County Traffic Signal and Streetlight Standards and Specifications

National Electrical Manufacturers Association (NEMA), Standards Publication No. TS2-2003

ANSI/IEEE C.62.41, IEEE Recommended Practice on Characterization of Surges in Low-Voltage (1000V and Less) AC Power Circuits

Applicable local ordinances

Underwriters Laboratories (UL) Standards

Wherever reference is made in this document or in the special provisions to any of the rules and standards listed above, the reference shall be construed to be to the document that is in effect at the date of bidding.

3. Installer Certification

The Contractor shall employ traffic signal technicians who have obtained an International IMSA Level II Traffic Signal Certification if they work on the project site and are in charge of any of the following:

Traffic signal-related electrical wiring terminations and splices, including but not limited to grounding, service entrances, and loops

Controller unit and cabinet assembly set-ups

Testing and review of all operational electrical equipment

Traffic signal assembly

Troubleshooting signals on flash or while working on controller cabinets

Cabinet preventive maintenance

Conduit installation (boring or trenching)

Pole foundation installation and pole setting

Junction box installation

Cable pulling and installation

4. Lead Worker / Supervisor

The Contractor shall assign a Lead Worker / Foreman to each project. This individual shall have at least 5 years of experience in traffic signal construction and installation and shall have an IMSA Level II Traffic Signal Technician Certification. The Contractor shall submit the Lead Worker / Foreman certification and work history to the Engineer for transmittal to Arlington County for approval before work on the project begins. Credentials for any Lead Worker / Foreman replacement(s) shall also be submitted to the Engineer for review and approval.

5. Roadway Work and Permit

Unless stated otherwise, all roadway and sidewalk work shall be in accordance with the latest version of the Virginia Department of Transportation Road and Bridge Specifications and Road and Bridge Standards. If VDOT and Arlington County specifications conflict; the Contractor shall notify the Engineer and request guidance. Generally, Arlington County specifications shall supersede VDOT specifications for County-maintained traffic signals and roadway work within Arlington County right-of-way (ROW).

6. Equipment Salvage

All traffic signal equipment that is removed shall remain the property of Arlington County. Such property is to be removed from the work site, tagged with date removed and location, and returned by the Contractor to the Arlington County Department of Environmental Services, 4300 29th Street S., Arlington, VA 22206. At the Engineer's discretion, the Contractor may be directed to dispose of the materials in lieu of salvage.

When signal pole and mast arm assemblies are removed, all components shall be marked as a set with permanent markings. The equipment shall be returned in the same condition as removed. Contact the Arlington County Traffic Signal Supervisor, Donald Cunningham at (703)-228-6655 to coordinate delivery. At the Engineer's discretion, the Contractor may be directed to dispose of the materials rather than deliver them to the County.

7. Existing Traffic Signals

When existing traffic signal installations are modified or completely rebuilt, the Contractor shall work around existing traffic signal equipment until the new or modified traffic signal system has been installed and put into operation.

Signal heads that are installed on span wire or poles for new installation and are not ready for actual electrical operation shall be bagged with black plastic or a suitable non-transparent material.

The Contractor shall maintain continuous operation of a minimum of two three-section (red, yellow, and green) traffic signal heads and pedestrian heads (if required) for each roadway approach. Special consideration shall be made to avoid the left-turn trap situation.

8. Intersection Power

The Contractor shall coordinate power sources with Virginia Dominion Power to obtain power hook-up to the signals and luminaires. The Contractor shall coordinate with Virginia Dominion Power from the early stages of construction to deliver the project on time.

9. Utilities

The utilities shown on the plans are based on records and surface field indications. All utility locations require field verification in cooperation with the affected utility companies and public agencies.

The Contractor shall follow the guidelines and procedures set forth in the Virginia Professional Excavator's Manual and is responsible for locating utility-related equipment such as gas and electric, and sewer laterals, valve boxes, and manholes and for ensuring that the equipment is properly protected and that signal equipment locations are adjusted accordingly with approval from the Engineer.

Miss Utility does not locate private utility laterals. The Contractor shall locate and mark private utilities in the work area or right-of-way before excavation. The Contractor shall repair any damage to private utilities that occurs as a result of construction.

10 Acronyms and Abbreviations for Traffic Signal Specifications

ºC degrees Celsius
cm centimeter
dB decibel
Dia. diameter
Hz hertz
ksi kilopounds per square inch
lbs pounds
mV millivolt
psi pounds per square inch
SF square feet
V volt
VAC volts alternating current
VDC volts direct current
W watt
AASHTO American Association of State Highway and Transportation Officials
AC alternating current
ADA Americans with Disabilities Act
ANSI American National Standards Institute
APS accessible pushbutton system
ASTM ASTM International
AWG American Wire Gauge
AWS American Welding Society
BBS battery backup system
BIU Bus Interface Unit
CADD computer-aided design and drafting
CCTV closed-circuit television
CCU Central Control Unit
CCU2EN Central Control Unit with Ethernet
County Arlington County, VA
CSA Canadian Standards Association
DC direct current
DTI direct tension indicating
EIA Electronic Industries Alliance
EN2 Ethernet Adaptor
EVP Emergency Vehicle Preemption
FLIR forward-looking infrared
FOV field of view
FS-ATS Fail Safe Automatic Transfer Switch
HDPE high-density polyethylene
ID identification
IEEE Institute of Electrical and Electronics Engineers
IIM Instructional and Informational Memorandum
IMSA International Municipal Signal Association
IP Internet protocol
LCD liquid crystal display
LED light-emitting diode
MUTCD Manual on Uniform Traffic Control Devices for Streets and Highways
NC normally closed
NEC National Electrical Code
NEMA National Electrical Manufacturers Association
NESC National Electrical Safety Code
NFPA National Fire Protection Association
NO normally open
NTSC National Television System Committee
PBS Pushbutton Station
PVC polyvinyl chloride
ROW right-of-way
RS Recommended Standard
Rules Rules for Overhead Electrical Line Construction of the Virginia Public Utilities Commission
S&B Structures and Bridges
TGIC triglycidyl isocyanurate
THD total harmonic distortion
THHN thermoplastic high-heat-resistant nylon-coated
TPS Trades Program Supervisor
UL Underwriters Laboratories
UPS uninterruptible power supply
USB universal serial bus
VDOT Virginia Department of Transportation

ORDER NO.: L89
CONTRACT ID. NO.: C000109813C01B

VIRGINIA DEPARTMENT OF TRANSPORTATION
SPECIAL PROVISION FOR

SIGNAL JUNCTION BOXES

March 27, 2017

1 Description

This work shall consist of furnishing and installing junction boxes in accordance with these specifications, as shown on the plans, or as directed by the Engineer.

2 County Standards

The detail drawings in the Arlington County Traffic Signal and Streetlight Standards that are applicable to junction boxes are as follows:

(a) TS4-4 Junction Box - Small

(b) TS4-5.1 Junction Box - Large

(c) TS4-5.2 Junction Box Large – Lid Details

(d) TS4-6 Electrical Junction Box for Non-Deliberate Traffic Installation Details

3 Materials

Composite junction boxes shall be Quazite Composite model number PC1212BA12 or equivalent with Cover PC1212CA00 or equivalent per County Standards. The cover shall be marked "Arlington County Transportation."

Traffic-rated junction boxes shall consist of a 24-inch steel frame and cover set on top of a 24-inch-diameter pre-cast structure per standards.

Traffic Collector and Communications junction boxes shall conform to Section 238 of the Specifications.

4 Execution

The Contractor shall provide the specified box, any required excavation to install the box, install required conduits into the box, and patch conduit entrance holes per County standards and the following.

(a) All conduits entering a junction box shall enter the box tangent to the box wall at the entry point.

(b) Conduit entry holes shall be patched such that debris and water cannot enter the structure.

(c) Conduits shall have bell ends installed in junction boxes.

(d) Conduits shall enter the sides of the structure at the depth of the conduit run and extend a minimum of 2 inches and a maximum of 3 inches into the structure.

(e) All junction boxes shall be set on washed gravel with a minimum of depth of 12 inches.

(f) The top of the junction box shall be installed flush with the grade unless otherwise specified.

(g) All metal junction box lids shall be painted black after final installation.

(h) All connections to grounding rods shall be accomplished by mechanical splice using grounding acorn clamps.

(i) A 5/8-inch by 8-foot copper-clad grounding rod shall be installed in each junction box.

5 Measurement and Payment

Junction box (Type) will be measured in units of each for the type specified and will be paid for at the contract unit price per each. This price shall include furnishing and installing junction box, frame and cover, grounding rod, parging, gravel base, and ground wire. The price shall also include restoring disturbed grass, pavers, concrete, asphalt, or other areas.

Payment will be made under:

Pay Item	Pay Unit
Junction Box (Type)	Each

ORDER NO.: L89
CONTRACT ID. NO.: C000109813C01B

VIRGINIA DEPARTMENT OF TRANSPORTATION
SPECIAL PROVISION FOR

MAST ARM POLES

March 27, 2017

1 Description

This work shall consist of furnishing and installing mast arm poles in accordance with these specifications, as shown on the plans, or as directed by the Engineer.

2 County Standards

The detail drawings in the Arlington County Traffic Signal and Streetlight Standards that are applicable to non-ornamental mast arm poles are as follows:

(a) TS7-1.1 Pole and Arm Ordering Scheme

(b) TS7-1.4 Fluted Mast Arm Pole

(c) TS7-1.5 Fluted Mast Arm Pole Details

(d) TS7-1.6 Non-Ornamental Round Mast Arm Pole

(e) TS7-1.7 Non-Ornamental Round Mast Arm Pole Details

(f) TS7-1.8 Non-Ornamental Round Mast Arm Details

(g) TS7-1.10 Mast Arm Pole Foundations

(h) TS7-1.11 Non-Ornamental Round Mast Arm Pole Details

(i) TS7-1.11 Mast-Arm, Strain Pole Foundation Details

3 General

This section describes minimum acceptable design and installation standards for poles and arms for traffic signals.

The Contractor shall provide Arlington County a written warranty against any defects in materials and workmanship for 1 year from the date of delivery to Arlington County.

For warranty repairs, all costs of labor, parts, and transportation to and from the site shall be borne by the Contractor.

4 Design

The design shall be in accordance with AASHTO Standard Specifications for Structural Supports for Highway Signs, Luminaires and Traffic Signals, 6th Edition 2013 with 2015 Interims and VDOT IIM-S&B-90.2.

All welding shall be in accordance with Sections 1 through 8 of AWS D1.1, Structural Welding Code. Tackers and welders shall be qualified in accordance with AWS D1.1.

5 Design Loading Requirements

(a) Structure components and their connections shall be designed to resist the worst-case loading, upon evaluation of all applicable cases acting separately.

(b) Design attachment loading

(1) Attachment loading data are shown in Table 0-1.

Table Error! No text of specified style in document.**-1: Design Attachment Loading (Dead Loads)**

Attachment	**Surface Area (SF)**	**Dead Load (lbs)**
Aluminum three-section head	6	63
Aluminum four-section head	8	84
8-foot x 2-foot street name sign	16	48
10-foot x 2-foot street name sign	20	60
30-inch x 36-inch regulatory sign	7.5	22.5
CCTV camera	1	22
Video detection camera	1	22
Opticom device	1	22
Luminaire	2	40
SF = square feet; lbs = pounds; CCTV = closed-circuit television		

(2) 0- to 40-foot mast arm lengths

(i) Three aluminum three-section heads spaced every 10 feet

(ii) One aluminum four-section head at the end of the arm (1 foot in from the end)

(iii) One 8-foot by 2-foot street name sign mounted between the inside two signals

(iv) Two 30-inch by 36-inch regulatory signs (next to the last two signal heads)

(v) One closed-circuit television (CCTV) camera halfway on the arm

(vi) One video detection camera over the outside lane

(vii) One Opticom device located 2 feet in from the end of the arm

(3) 42- to 50-foot mast arm lengths

(i) Four aluminum three-section heads spaced every 10 feet

(ii) One aluminum four-section head at the end of the arm (1 foot in from the end)

(iii) One 8-foot by 2-foot street name sign mounted between the inside two signals

(iv) Three 30-inch by 36-inch regulatory signs (next to the last two signal heads)

(v) One CCTV camera halfway on the arm

(vi) One video detection camera over the outside lane

(vii) One Opticom device located 2 feet in from the end of the arm

(4) 52- to 60-foot mast arm lengths:

(i) Four aluminum three-section heads spaced every 10 feet

(ii) Two aluminum four-section head at the end of the arm (1 foot in from the end)

(iii) One 8-foot by 2-foot street name sign mounted between the inside two signals

(iv) Four 30-inch by 36-inch regulatory signs (next to the last two signal heads)

(v) One CCTV camera halfway on the arm

(vi) Two video detection cameras (over the outside lane, and over the middle of the remaining length)

(vii) One Opticom device located 2 feet in from the end of the arm

(5) 62- to 66-foot mast arm lengths

(i) Five aluminum three-section heads spaced every 10 feet

(ii) Two aluminum four-section head at the end of the arm (1 foot in from the end)

(iii) One 10-foot by 2-foot street name sign mounted between the inside two signals

(iv) Five 30-inch by 36-inch regulatory signs (next to the last two signal heads)

(v) One CCTV camera halfway on the arm

(vi) Two video detection cameras (over the outside lane and over the middle of the remaining length)

(vii) One Opticom device located 2 feet in from the end of the arm

(6) All poles shall also be designed for one 12-foot luminaire arm and one luminaire at the end of the luminaire arm. This allows longer luminaire arms to be installed in the future.

(c) Wind loading

The entire assembly shall be designed to meet the wind loading requirements of VDOT IIM-S&B-90.2.

(d) Fatigue loading

The entire assembly shall be designed to meet the fatigue loading requirements of VDOT IIM-S&B-90.2.

(e) Special designs

Mast arm signal pole systems with a larger loading than specified above require a special design. Special designs shall be submitted to the Engineer with sealed shop drawings and a letter from a Professional Engineer holding a valid license to practice engineering in the Commonwealth of Virginia certifying that the design meets the requirements of this specification.

Design shall include mast arm(s), luminaire arm, pole, baseplate, and anchor bolt analysis. Maximum arm and pole loads, stresses, and combined stress ratios shall be provided for each group load, as well as maximum pole dead load rotation.

For anchor bolt forces, pole forces shall be positioned in such a manner to maximize the force on any individual bolt regardless of the actual bolt orientation with the pole. The design of anchor bolts shall result in a ductile steel failure before any sudden brittle failure of the concrete.

Provide shop drawings detailing the poles as designed to the Engineer for transmittal to Arlington County. Shop drawings shall contain all component drawings necessary to fabricate the structure. Drawings shall at a minimum specify the pole height, arm length(s), pole and arm diameters at the base and tip, splice locations, bolt circle diameter, bolt diameters, and detailed drawings showing the handhole cover assemblies. The drawings shall also show the width, depth, length, and thickness of all material and list pertinent ASTM specification designations together with the tensile strength of metallic members.

6 Materials

(a) The materials used for construction shall conform to Table 0-2 specifications.

Table Error! No text of specified style in document.**-2: Material Yields for Construction Components**

Component	**ASTM Designation**	**Minimum Yield (ksi)**
Pole shaft	A595 or A572	55
Pole base	A36	36
Galvanizing structure	A123	—
Galvanizing hardware	A153	—
Arm shaft	A595 or A572	55
Arm connection	A36	36
Arm connection bolts	F3125 GALVD. To A153	—
DTI washers	ASTM F959	—
Luminaire arm shaft	Per manufacturer	35
Luminaire arm casting	A27GR.65-35	35
Luminaire arm connection bolts	SAE GR.5 or ASTM F3125	—
Plate and channel	A36	36
Anchor bolts	F1554	55
ksi = kilopounds per square inch; DTI = direct tension indicating		

(b) The manufacturer shall provide mill certifications for steel materials.

(c) All poles, arms, transformer bases, and hardware shall be galvanized then powder coated or painted as specified on the plans or by the Engineer before installation.

(d) Non-ornamental poles shall have a rust-resistant coating applied to the inside of the pole. The color of the outside of the pole will be specified at time of order. All poles, arms, ornamental bases, and hardware shall use one of the following coating systems:

(1) Option 1

(i) Primer = DuPont 25P Primer

(ii) Top Coat = DuPont 333 Imron

(2) Option 2

Triglycidyl isocyanurate (TGIC) polyester powder at a minimum thickness of 2.0 mils

7 Pole Shafts

(a) There are four size categories of single-arm mast arm poles:

(1) 20 to 40 feet

(2) 42 to 48 feet

(3) 50 to 60 feet

(4) 62 to 66 feet

All of the poles in a size category shall have the same base plate size and bolt pattern.

(b) There are four size categories of dual-arm mast arm poles:

(1) 20 to 40 feet

(2) 42 to 48 feet

(3) 50 to 60 feet

(4) 62 to 66 feet

The lengths listed are the longest arm. All of the poles in a size category shall have the same base plate size and bolt pattern.

(c) Mast arm poles shall be 30 feet tall. The mast arm connection shall be located 20 feet above the base of the pole. The luminaire arm connection shall be located 29 feet and 6 inches above the base of the pole.

Truncated pole shafts (poles without extra height for luminaires) shall be 2 feet taller than the top of the connection plate. The design of the pole shall assume conditions for a pole with luminaire arm.

(d) Mast arm poles shall be round. Multi-sided pole shafts are unacceptable. The shaft shall be one piece and contain no circumferential weld butt splices. The shaft shall have a constant linear taper of 0.14 inch per foot. The minimum thickness of steel shall be 7 gauge.

(e) Pole diameters at the connection to the base plate shall not exceed the diameters listed in Table 0-3.

Table Error! No text of specified style in document.**-3: Pole Design Shaft Diameter**

Single-Mast Arm Poles		**Dual-Mast Arm Poles**	
Arm Length (ft)	Max Dia. (in.)	Arm Length (largest) (ft)	Max Dia. (in.)
<40	18	<50	20
40-48	20	50+	24
50+	24	—	—
ft = feet; in. = inches; dia. = diameter			

(f) Identification tag

1. Provide an identification tag affixed to the pole with the following information:

(1) Arlington County, VA

(2) Manufacturer

(3) Date of manufacture (MM/YY)

(4) Pole height and gage

(5) Arm length and gage

(6) Anchor bolt diameter and length

(7) Bolt circle diameter (on center of bolts)

(8) Serial number

The tag shall be attached between 4 feet and 5 feet above the base of the pole.

(g) Handholes

(1) An access hole and J-hook shall be provided on the opposite side of the pole shaft from the mast arm at the same elevation as the center of the mast arm. The access hole at the mast arm height shall have an outside dimension of 4 inches by 6 inches exclusive of reinforcement. The handhole cover shall be attached to the inside of the pole with a chain to prevent dropping the handhole cover.

(2) A second access hole shall be provided 2 feet above the pole base to the bottom of the access hole. The lower access hole shall be provided on the opposite side from the attachment of the longest mast arm. The lower access hole shall have an outside dimension of 6 inches by 8 inches exclusive of reinforcement.

(3) Provide a grounding L-clip welded directly opposite the access hole on the inside wall of the pole.

(4) All handholes shall have a neoprene rubber gasket that is permanently secured to the handhole frame to ensure weather-tight protection. Handholes shall be provided with a bolted-on galvanized steel cover painted to match the pole. The handhole cover shall be removable from the frame.

(h) Connection plate

The mast arm connection plate shall be located 20 feet above the base of the pole. The connection plate shall have an upward angle 3 degrees from the horizontal plane. See attached drawings.

(a) Pole top

Each pole shall be provided with an end cap secured in place with set screws.

(h) Luminaire arm

(1) Poles shall be supplied with a luminaire arm. The luminaire arm shall be a King Luminaire model KA120-S or equivalent. See attached drawings.

(2) The luminaire arm connection shall be located 29 feet and 6 inches above the base of the pole. The arm shall extend 6 feet from the pole shaft.

8 Mast Arms

(a) There are four size categories of mast arms:

(1) 20 to 40 feet

(2) 42 to 48 feet

(3) 50 to 60 feet

(4) 62 to 66 feet

(b) To achieve interchangeability between arms and poles, all of the arms in a size category shall have the same connection plate size and bolt pattern.

(c) Mast arms shall be round. Multi-sided and fluted mast arms are unacceptable. Mast arms shall have a constant linear taper of 0.14 inch per foot. The minimum thickness of steel shall be 7 gauge.

(d) Mast arms up to 50 feet in length shall be manufactured and shipped in one piece. Mast arms 50 feet and longer shall be manufactured and shipped in two pieces with no piece having a length greater than 40 feet. Circumferential welded tube butt splices and laminated tubes are not permitted.

(e) Wire entrance holes 1-3/8 inches in diameter shall be drilled into the bottom of the arm every 11 feet starting at a point approximately 9 inches from the free end of the arm. Rubber grommets shall be installed in all wire entrance holes.

9 Anchor Bolts

(a) A minimum of six fully galvanized anchor bolts shall be supplied for all mast arm poles. There shall be two steel templates provided per pole. All templates shall be fully galvanized.

(b) Provide galvanized nuts compatible with the anchor bolts as needed to complete the installation. Nut covers shall be provided for all nuts.

(c) Furnish two flat washers with each bolt/nut/washer assembly. Furnish galvanized direct tension indicating (DTI) washers. Use the size, number, type, and configuration of hardened flat washers the DTI manufacturer recommends for the anchor bolt diameter.

(d) The following notes shall be included on all plans and/or shop drawings in reference to anchor bolts:

(1) Pretensioning of all anchor bolts is required and shall be accomplished with the use of DTI washers. Nuts shall be tightened until proper pretensioning is indicated by the DTI washer.

(2) The maximum clearance between the bottom of the leveling nuts and the top of the concrete shall not exceed the amount specified on the drawing.

10 High-Strength Bolts

(a) Provide galvanized high-strength bolts for connections. Provide galvanized nuts compatible with the bolts as needed to complete the installation.

(b) Furnish two flat washers with each bolt/nut/washer assembly. Furnish galvanized DTI washers. Use the size, number, type, and configuration of hardened flat washers the DTI manufacturer recommends for the bolt diameter.

11 Execution

(a) Installation of mast arm poles shall include transporting and placing the poles on the proper foundations, and installing luminaire arms if necessary. Once placed, the Contractor shall properly clean all poles and remove all labels before acceptance.

(1) Steel poles shall be placed and securely mounted on concrete foundations.

(2) Strain poles and mast arm poles shall have a 3% rake or as specified by the Engineer such that the pole is vertical under dead loads.

(3) All pole accessories including scrolls, nuts, nut covers, handhole covers, mast arm end caps, and pole caps shall be in place before acceptance.

(4) Installation shall include bolting the mast arm(s) to the pole.

(5) Pretensioning of all connection and anchor bolts is required and shall be accomplished with the use of DTI washers. Nuts shall be tightened until proper pretensioning is indicated by the DTI washer according to the instructions detailed by the DTI washer manufacturer.

(b) Field welding is not permissible without written approval by the Engineer.

(c) The use of grout under base plates is not permitted.

(d) Install traffic signal heads and signs within 5 days after installing the mast arm.

12 Measurement and Payment

(a) **Signal Poles** will be measured in units of each and will be paid for at the contract unit price per each. This price shall include designing, furnishing and installing poles, flanges plates, anchor plates, bolts, transformer bases, galvanizing and powder coating or painting; and welding.

(b) **Mast Arms** will be measured in units of each and will be paid for at the contract unit price per each. This price shall include designing, furnishing and installing mast arms, flanges plates, anchor plates, bolts, transformer bases, galvanizing and powder coating or painting; and welding.

(c) **Luminaire arms** will be measured in units of each and will be paid for at the contract unit price per each. This shall include furnishing, and mounting, arm, LED lamp, and photocell.

Payment will be made under:

Pay Item	**Pay Unit**
Signal Pole	Each
Mast Arm	Each
Luminaire arm	Each

ORDER NO.: L89
CONTRACT ID. NO.: C000109813C01B

VIRGINIA DEPARTMENT OF TRANSPORTATION
SPECIAL PROVISION FOR

SIGNAL CONDUIT

March 14, 2017

1 Description

This work shall consist of furnishing and installing conduit in accordance with these specifications, as shown on the plans, or as directed by the Engineer.

2 Materials

(a) Polyvinyl chloride (PVC) conduit shall be schedule 40, schedule 80, or high-density polyethylene (HDPE) as shown on the plans or as directed by the Engineer. All couplings, elbows, bushings, and other conduit fittings shall be of the same quality, strength, and grade of workmanship as the conduit and shall be manufactured expressly for use with the conduit and UL listed.

(b) Steel conduit and fittings shall be galvanized and heavy wall and shall meet ANSI C80.1, American National Standard for Electrical Rigid Steel Conduit, and UL 6, Electrical Rigid Metal Conduit – Steel. All couplings, elbows, bushings, and other conduit fittings shall be of the same quality, strength, and grade of workmanship as the conduit and shall be manufactured expressly for use with the conduit.

(c) All transitions from HDPE pipe to PVC shall be by means of an aluminum threaded coupling or ETCO E-LOC couplings. These couplings are the only approved method for connecting the 90º degree sweep.

3 Execution

(a) General conduit installation

(1) Where multiple conduits are installed in a single trench, the conduits shall be separated by 1 inch of sand or by prefabricated conduit spacing units.

(2) Conduit direction changes shall be accomplished by using standard elbows or field bends. All bends shall meet the requirements in NEC Article 346 for rigid metallic conduit and NEC Article 347 for rigid non-metallic conduit.

(3) There shall be no more than the equivalent of four quarter bends (360 degrees total) between pull points (e.g., conduit bodies and boxes).

(4) Steel conduits shall be cut with a roller cutter. Cutting conduits with a hand saw or power saw is not acceptable.

(5) The ends of the conduit shall be reamed to remove burrs and rough edges. Cuts shall be made square and true so that the ends will butt or come together for the full circumference of the conduit.

(6) All couplings shall be tightened until the ends of the conduits are brought together, providing a good electrical connection throughout the entire length of the conduit run. All conduit connections shall be accomplished with threaded ends.

(7) When conduit is cut and threaded, corrosion protection shall be applied to the newly cut threads and ream area. The Contractor shall thoroughly clean the thread and ream area with a degreaser spray to remove all cutting oil and metal chips before applying any coating. When the threads are clean and dry, a coating of cold galvanizing compound or a zinc-rich galvanizing compound (similar to Rustoleum, Hard Hat or CRC Instant Cold Galvanize) shall be applied to the threads and ream area.

(8) All conduits terminating in a junction box, pole base, or controller cabinet shall be threaded and provided with a grounding bushing. The grounding bushings shall be bonded together with grounding wire. Where non-metallic conduit is used, conduit ends shall have protective end bushings installed.

(9) Conduit risers shall be rigid metallic conduit and attached with conduit clamps. A rain-tight entrance cap with plastic wire entry knockouts shall be installed at the top of each riser. The rigid metallic conduit riser shall extend a minimum of 18 inches into the ground and shall be continuous to the junction box or foundation.

(10) A 500-pound test strength nylon pull line shall be installed in all conduits.

(11) Concrete-encased PVC conduit shall have a minimum of 3 inches of concrete on the top, bottom, and sides of the conduit, with 1-1/2 inches of spacing between conduits.

(12) All underground conduit runs shall have a tracer wire (14 AWG stranded thermoplastic high-heat-resistant nylon-coated [THHN]) installed from junction box to junction box. Multiple conduit runs in the same trench shall have tracer wire in at least one conduit.

(13) The Contractor, at the Contractor's sole expense, may use larger conduit if desired—except where entering a cabinet foundation. Where larger conduit is used, it shall be for the entire length of the run. Reducing the number of couplings underground will not be permitted.

(14) All conduits shall terminate in junction boxes such that when cable is pulled and coiled within the junction box there is a minimum clearance of 3 inches between the junction box lid and the conduit and cable. Cable and conduit shall not be crushed or damaged.

(15) The ends of all metal conduits, existing or new, shall be well reamed to remove burrs and rough edges. Field cuts of existing or new conduit shall be made square and true, and the ends shall butt together for the full circumference of the conduit. Slip joints or running threads will not be permitted for coupling metal conduit. When a standard coupling cannot be used, an approved threaded union coupling shall be used. All couplings shall be screwed tight until the ends of the metal conduits are brought together.

(16) Where a "stub out" is called for on the plans, a sweeping ell shall be installed in the direction indicated and sealed with a metallic cap to facilitate locating. The locations of all conduit ends in structures or terminating at curbs shall be marked by a "Y" at least 3 inches high cut into the face of the curb, gutter, or wall directly above the conduit.

(17) Where factory bends are not used, conduit shall be bent without crimping or flattening, using the longest radius practicable. Conduit bends feeding junction boxes and foundations shall be as shown on the standard details, typically 18 inches.

(18) Conduits shall always enter a pedestal base, junction box, or any other type structure from the direction of the run only. Conduit connections at junction boxes shall be tightly secured.

(19) Conduits terminating in a standard or pedestal shall extend approximately 2 vertical inches above the foundation.

(20) All conduit runs that are more than 10 feet long shall have a continuous 1/8- or 1/4-inch nylon rope (blow line cannot be substituted but can be added) pulled into the conduit along with the specified electrical cables. The line shall be firmly secured at each end of the conduit run with a minimum slack of 4 feet. The purpose of the rope is to provide a means of pulling electrical cable through the existing conduit runs. The rope shall not be tangled or twisted around cables.

(21) Existing underground conduit to be incorporated into a new system shall be cleaned with a mandrel or blown out with compressed air.

(22) New conduit runs shown on the plans are for bidding purposes only and may be changed at the direction of the Engineer.

(23) Any spare or unused conduits installed for future use shall be sealed with a metallic cap and a single 14 AWG stranded THHN wire through the entire run to facilitate future locating.

(24) All conduit installed, including HDPE pipe, shall be at full depth for the entire conduit run. Ninety-degree sweeps shall not be cut to achieve proper entrance to the junction box. Conduit runs shall have no more than a 180-degree bend.

(25) All conduits in junction boxes shall extend a minimum of 3 inches above crushed rock.

(b) Trenching

(1) Unless otherwise shown or approved by the Engineer, conduits shall be placed at a minimum depth of 36 inches within Arlington County ROWs. Within VDOT ROWs, in accordance with VDOT regulations, all conduits shall be buried with a minimum of 36 inches of cover.

(2) All trenching shall conform to Arlington County Construction Standards, Section 303 of the Specifications and the Restoring Existing Pavement Special Provision.

(3) Trenches shall be free of cinders, broken concrete, and other hard abrasive materials before conduit placement.

(4) The Contractor shall preserve the existing landscaping. When trenching in earth, the Contractor shall carefully remove the existing sod and then put the new sod into place when the work is complete. The Contractor shall put all earth that has been excavated on a plastic sheet to protect the existing landscaping.

(5) The Contractor shall completely restore the trench at the end of every work day. Restoration shall include backfilling, compacting, and placing the sod.

(6) Boring under the sidewalk/street shall involve boring runs from 30 to 100 feet (typical) or more in length. The Contractor may use the directional bore method instead of trenching or backfilling. Boring may be under asphalt paving, concrete sidewalk, or grass.

(7) Test holes shall be dug in asphalt pavement per the Virginia Professional Excavator's Manual and Miss Utility guidelines for test pits.

(c) Boring

(1) The Contractor shall to dig test pits where new conduit crosses underground utilities, as specified on the plans or as directed by the Engineer.

(2) Bored conduits shall adhere to the same depth requirements as trenched conduits and shall adhere to appropriate utility clearances.

4 Measurement and Payment

(a) **Conduit** will be measured in linear feet and will be paid for at the contract unit price per linear foot. This price shall include furnishing and installing conduit bodies, fittings, bonding systems, pull ropes, pull tapes, plastic spacers, 14 AWG stranded THHN when required, junction or splice boxes with an area of 512 cubic inches or less, supports, aggregate, and protective metal shields. The price shall also include restoring existing surfaces, including but not limited to, concrete work, asphalt repair, pavers, and sod. Replacing concrete and asphalt due to boring or trenching shall be incidental to the cost of installing the conduit.

(b) Test pits will be measured and paid for in accordance with the Verifying Existing Utility Locations Special Provision.

Payment will be made under:

Pay Item	**Pay Unit**
Conduit (Size)	Linear Foot
Conduit Bored (Size)	Linear Foot

ORDER NO.: L89
CONTRACT ID. NO.: C000109813C01B

VIRGINIA DEPARTMENT OF TRANSPORTATION
SPECIAL PROVISION FOR

TRAFFIC CABLES

March 14, 2017

1 Description

This work shall consist of furnishing and installing conductor cables in accordance with these specifications, as shown on the plans, or as directed by the Engineer.

2 Materials

(a) Vehicular and pedestrian signal heads

(1) Signal heads shall be wired with #14 AWG 7 conductor cable.

(2) The conductor cable shall be stranded copper. Each conductor shall be insulated with polyethylene and twisted for maximum flexibility. Grouped conductors shall be covered by a PVC outer jacket. Cable shall meet the IMSA 19-1 cable specification.

(b) Intersection lighting

(1) Intersection lighting shall be wired with #12 AWG 2 conductor underground feeder cable with ground.

(2) Conductors shall be soft uncoated copper per ASTM Standard B3, Standard Specification for Soft or Annealed Copper Wire. Conductor insulation and jacket shall be color-coded PVC rated at 90 ºC.

(3) Grounding conductor shall also be soft uncoated copper per ASTM B3. Conductors are to be encased in a gray sunlight-resistant PVC jacket that is applied directly over and around the insulated and bare conductors.

(4) Insulated conductors and ground shall to be laid parallel within the jacket.

(c) Pedestrian pushbuttons

(1) Pushbuttons shall be wired with #14 AWG 3 conductor cable.

(2) Cable shall be stranded copper. Each conductor shall be insulated with polyethylene and twisted for maximum flexibility. Grouped conductors shall be covered by a PVC outer jacket. Cable must meet the IMSA 19-1 cable specification.

(d) Video detection cable

Video cable shall be RG-59 solid center coax cable (RG-59/U rated or better).

(e) Extra high-strength strand cable (span wire)

Strand cable shall be 3/8-inch galvanized steel (Class A) with seven wires per stand. The minimum breaking strength shall be 15,400 pounds.

(f) Ground wire

Ground wire shall be #8 AWG bare copper wire.

3 Execution

(a) Cables shall be installed by using existing pull rope, new jet-lined pull rope, or similar rope to pull the cable.

(b) Unless otherwise approved by the Engineer, wiring shall not occupy more than 40% of the inside area of throughout the conduit. The Contractor shall verify the existing conduit is less than 40% full before pulling new cables through. If more than 40% of the inside area is occupied, the Contractor shall provide additional conduit to satisfy this requirement.

(c) The Contractor shall proof new conduits before pulling cables to ensure the cables can be pulled without damaging existing cables.

(d) The Contractor shall replace pull ropes if used to install new cables in existing conduits. If no pull rope existed in the conduit, a new pull rope shall be installed.

(e) Cables shall not be spliced within conduits. Wiring shall conform to the appropriate articles of the NEC wiring within cabinets, junction boxes, and similar equipment and shall be neatly arranged.

(f) Powdered soapstone, talc, or other approved lubricant shall be used when placing conductors in conduit.

(g) A 1/8- or 1/4-inch nylon pull rope shall be installed in all new conduits and in all existing conduit where a cable is added or an existing cable is replaced. A minimum of 4 feet of slack shall be left in each conduit at each termination.

(h) Cables shall be installed with their slack length coiled in junction boxes. The coiled length shall be sufficient to allow cables to extend at least 4 feet above the junction box.

(i) At least 5 feet of slack shall be left for each conductor at each span wire support pole.

(j) Splices shall be kept to a minimum and are allowed only in junction boxes and at pole bases. A minimum of 24 inches of slack shall be left on each splice wire. Shellac compounds shall not be used.

(k) Detector loop lead-in splices in junction boxes shall be fully waterproofed using a splice kit or epoxy wire nuts approved by the Engineer (Buchanon BTS2 or BTS4 or equivalent). A minimum of 12 inches of slack shall be left on the detector loop.

(l) When conductors and cables are pulled into the conduit, all ends of conductors and cables shall be taped to exclude moisture and remain as such until the splices are made or terminal appliances attached. Ends of spare conductors shall be taped and marked.

(m) All wiring shall use 19 or 21 conductors per cable for high voltage (exceeding 50V). Conductor cable shall be installed where required in the design plans. Overhead cable shall be secured to messenger cable with cable rings or stainless steel wire wrap only.

(n) Signal heads mounted on mast arms shall be wired individually from the head to the handhole at the bottom of the pole.

(o) Four-approach intersections shall be initially wired to all poles to handle eight vehicle phases plus four pedestrian phases following NEMA standard phasing or per plans. Tee intersections shall be initially wired to all poles to handle at least five vehicle phases and three pedestrian phases. At least three spare conductors shall be provided from the controller cabinet to the handhole of each signal pole.

(p) Span wire and tether cable shall be affixed to the pole using short bail strand vises. If required by the Engineer, insulators shall be provided, and long bail strand vises shall be used.

(q) Removal of signal cable in conduit shall consist of removing and disposing of the cables in an existing conduit. The pull rope and tracer wire in the conduit shall remain and shall not be removed with the cable. The Contractor shall not damage cables remaining in the conduit and shall repair any cables damaged as a result of the removal.

4 Conductor Labeling

A small permanent plastic tag on which the direction and phase is printed shall be securely attached near the end of each conductor or group of conductors grouped per phase or function at each controller and signal pole. Loop detector lead-ins shall be tagged in the splice junction box behind the curb.

5 Measurement and Payment

Cables will be measured in linear feet and will be paid for at the contract unit price per linear foot for the size, type, and number specified. This price shall include furnishing and installing conductors, breakaway connections, markings and identifications, splice kits, electrical tape, testing, and connections. The cost of installing or replacing pull rope shall be incidental to the cost of cable.

Payment will be made under:

Pay Item	Pay Unit
Conductor Cable (Size)	Linear foot

ORDER NO.: L89
CONTRACT ID. NO.: C000109813C01B

VIRGINIA DEPARTMENT OF TRANSPORTATION
SPECIAL PROVISION FOR

SIGNAL FOUNDATIONS

March 14, 2017

1 Description

This work shall consist of furnishing and installing foundations in accordance with these specifications, as shown on the plans, or as directed by the Engineer.

2 County Standards

The detail drawings in the Arlington County Traffic Signal Standards that are applicable to foundations are as follows:

(a) TS4-1.1 Controller Cabinet Foundation Details

(b) TS4-1.2 Controller Cabinet Foundation Details

(c) TS4-2 Strain Pole Foundation

(d) TS4-3 Pedestal Pole Foundation

(e) TS7-1.1 Traffic Signal Pole Foundations

3 General

(a) Foundations (for cabinets, pedestrian poles, strain poles, and street lights) shall be poured in accordance with the drawings in the Arlington County Construction Standards and Specifications and Arlington and Section 700 of the Specifications unless otherwise directed by the Engineer.

(b) Mast-arm, strain pole, and pedestrian pole foundations shall conform to 66-01 through 66-04 of the County's signal specification unless directed otherwise by the Engineer before the construction.

(c) All signal mast arm pole foundations shall have six bolts.

4 Materials

Concrete shall be Class A3 conforming to Section 217 of the Specifications.

5 Execution

(a) Forms shall be true to line and grade. Tops of foundations, except as noted on design plans, shall be finished to curb or sidewalk grade or as directed by the Engineer. The Contractor shall coordinate with any adjacent projects to confirm correct final grades.

(b) Forms shall be rigid and shall be securely braced in place and inspected before the concrete is poured. Conduit ends and anchor bolts shall be placed in proper position and in a template until the concrete sets.

(c) The Contractor shall contact the Engineer for the inspection of forms and reinforcing cage before pouring concrete.

(d) Anchor bolts shall conform to the manufacturer's specifications. Each bolt shall have two flat washers and two nuts. Shims or other similar devices for plumbing or raking will not be permitted. Stirrups shall be installed on all foundations.

(e) Anchor bolts shall extend the required distance above the top of the foundation to allow the appropriate length beyond the leveling nuts.

(f) The forms, as well as any ground that will be in contact with the concrete, shall be thoroughly moistened before placing concrete. Forms shall not be removed until the concrete has thoroughly set.

(g) Whenever excavation for a foundation requires removal of excess ground material, the excavation shall be backfilled to within 12 inches of ground level with 60 to 120psi Class M concrete and then backfilled to ground level with native material compacted per the Engineer's direction.

(h) All foundations shall be hand floated until the top is smooth and level.

(i) Concrete shall be poured and cured in accordance with Section 404 of the Specifications.

(j) Pole foundations shall be poured against undisturbed earth. Cast-in-place foundations shall be poured monolithically where practicable. The exposed portions shall be formed to present a neat appearance.

(k) Conduit directions and quantities shall be marked into foundation concrete in accordance with Section 700 of the Specifications.

(l) Top of foundations shall be flush with surrounding concrete when located in sidewalk or paver areas.

(m) The Contractor shall not leave foundation holes uncovered or unprotected. The Contractor shall ensure pedestrian safety throughout the installation of the foundation.

(n) A 5/8-inch by 8-foot copper-clad grounding rod shall be installed in each cabinet foundation. The cabinet foundation grounding rod shall have a non-metallic sleeve (PVC) to prevent contact with the concrete foundation.

6 Measurement and Payment

Foundations will be measured in units of each or cubic yards and will be paid for at the contract unit price per each or cubic yard as applicable for the standard, type, and size designated. When paid for in cubic yards of concrete, no payment will be made for concrete in excess of the cubic yards of concrete required by the approved foundation design unless otherwise authorized by the Engineer. When authorized by the Engineer, the additional concrete will be paid for in cubic yards at the invoice material cost only. This price shall include providing foundation design and shop drawings, furnishing and installing concrete, reinforcing steel, stub poles, anchor bolts, bolt circle templates, grounding equipment, conduits, lubricant, torque, ultrasonic test on anchor bolts, excavating, backfilling, compacting, disposing of surplus and unsuitable materials, and restoring existing areas. Removal and replacement of existing concrete, asphalt, or brick sidewalk and/or pavement due to installation shall be incidental to the concrete foundation item. If a foundation is installed to the incorrect grade, the Contractor shall remedy the error by removing the foundation and replacing the entire foundation.

Payment will be made under:

Pay Item	Pay Unit
Foundation	Each or Cubic Yard

ORDER NO.: L89
CONTRACT ID. NO.: C000109813C01B

VIRGINIA DEPARTMENT OF TRANSPORTATION
SPECIAL PROVISION FOR

ACCESSIBLE PUSHBUTTON SYSTEM

March 14, 2017

1 Description

This work shall consist of furnishing and installing accessible pushbutton system in accordance with these specifications, as shown on the plans, or as directed by the Engineer.

2 County Standards

The detail drawings in the Arlington County Traffic Signal and Streetlight Standards that are applicable to the accessible pushbutton system (APS) are:

(a) TS7-5 Pedestal Pole Detail

(b) TS7-6.1 APS Pushbutton Detail

3 Materials

(a) Pushbutton station, signs, and all component parts shall be of Polara type and meet the latest edition of applicable NEMA and UL standards.

(b) Central Control Unit with Ethernet (CCU2EN)

(1) The Central Control Unit (CCU) shall be installed inside the traffic cabinet and powered by the AC supply mains (115VAC). The CCU is the power supply and signaling interface between the existing intersection of the traffic control unit and APS stations.

(2) One EZ Communicator CCU2EN can control up to 16 Ethernet Adaptor (EN2) Pushbutton Stations (PBSs), four maximum per channel.

(3) The CCU2EN controls up to four pedestrian channels, receiving its timing from the Walk and Don't Walk signals.

(4) All inputs and outputs have full optical isolation and include voltage protection.

(5) The CCU2EN has two built-in conflict monitoring systems. The CCU2EN monitors the PBS and Ped-Head lights and powers off the channel upon a conflict. Each processor monitors the other monitors and resets the CCU2EN upon loss of internal communication.

(6) The CCU2EN is backward compatible with older 2-wire Navigator N2 PBSs (v1.12 or newer). There is an option switch on the back of the CCU2EN that specifies N2 or EN2. If all PBSs are EN2 PBSs, the EN2 position is used. If any of the PBSs are older 2-wire N2 PBSs, the N2 position shall be used.

(7) The Ethernet port adds a connection to an on-board web server, which provides information on PBS status, an event log, and remote configuration of EN2 PBS options.

(8) Serial numbers and model numbers, if available, shall be permanently engraved on all removable components and hardware. The serial number and model number shall be etched, stamped, molded, or attached using metallic self-adhesive labels. Adhesive-backed paper labels are not acceptable.

(9) APS stations and signs shall be designed to mount near or at the bottom of the pedestrian display mounting post. The pushbutton assembly for the audible signal may replace or supplement an existing pedestrian signal pushbutton.

(10) APS stations and signs shall be designed to the following:

(i) Each station shall have a 2-inch button with a tactile raised directional arrow on the button.

(ii) It shall be possible to change the arrow direction to one of four directions.

(iii) Arrow/button shall vibrate during the walk period following a push of the button.

(11) APS stations and signs shall have the following features:

(i) Locating tone

(ii) A direction of travel and an information message with extended push

(iii) Vibro-tactile walk phase indication

(12) The audible sounds emitted by APS stations and signs shall have the following properties:

(i) All audible sounds emanate from the PBS.

(ii) All audible sounds from PBSs are synchronized.

(iii) All sounds automatically adjust over a 60 dB range to compensate for ambient noise levels.

(iv) Sounds at all crosswalks except activated crosswalks can be muted.

(13) APS station and sign systems shall meet the following requirements:

(i) The system shall be able to play an emergency preemption message.

(ii) The system shall be able to self-test buttons and report any faults to the traffic controller.

(14) Audible messages shall conform to the 2009 MUTCD Rev. 2, Section 4E, and the following:

(i) If speech walk messages are used to communicate the walk interval, they shall provide a clear message that the walk interval is in effect, as well as to which crossing it applies. Speech walk messages shall be used only at intersections where it is technically infeasible to install two accessible pedestrian signals at one corner separated by at least 10 feet.

(ii) Speech walk messages that are used at intersections having pedestrian phasing that is concurrent with vehicular phasing shall be patterned after the model “Broadway. Walk sign is on to cross Broadway at 1st.”

(iii) Speech walk messages that are used at intersections having exclusive pedestrian phasing shall be patterned after the model “Walk sign is on for all crossings.”

(iv) Speech walk messages shall not contain any additional information, except that they shall include designations such as “Street” or “Avenue” where this information is necessary to avoid ambiguity at a particular location.

(v) Vibro-tactile walk phase indication shall be triggered during each walk indication.

(vi) Following the audible walk indication, accessible pedestrian signals shall announce the pedestrian change interval countdown “10, 9, 8... etc.”

(vii) A speech walk message is not required when the walk interval is not active, but if provided:

(A) It shall begin with the word “wait.” Speech wait messages shall be patterned after the model “Wait to cross Broadway at 1st. Wait.”

(B) It need not be repeated for the entire time the walk interval is not active, but each push of the button shall be accompanied by the speech message patterned above.

(15) The pushbutton shall be warranted for 5 years from the date of shipment from the factory. Proof of warranty shall be provided to the County from the Contractor.

4 Execution

(a) Installation of the APS shall consist of drilling holes in the signal pole to accommodate the wiring and mounting, tapping threads into the pole, and making the necessary electrical connections and running the cable between signal heads and pushbutton.

(b) The pushbutton apparatus shall be bolted to the pole 3.5 feet above grade (from the center of the button) with bolts extending out from the rear of the apparatus and into the pole.

Where an ornamental pole base extends above the mounting height of the pushbutton, an extender shall be provided to allow for easy wheelchair access. The extender shall be Polara type 6” or 12” in length, depending on field conditions.

(c) The Contractor shall program the APS in accordance with Arlington County specifications for the audible messaging. All programming is the responsibility of the Contractor. The Contractor shall check operation of vibro-tactile (Polara) pushbutton announcements with street names and locator tone and adjust the sound level if necessary. The Contractor shall disable audible messages and locator tone until full functionality and programming is completed.

(d) The Contractor shall install the CCU in the cabinet per standard cabinet equipment layout, terminate all connections into the cabinet, and fully wire pushbutton systems.

(e) Programming of the pushbutton shall conform to Arlington County Traffic Signal Standard 68-02.

(f) A plaque shall be mounted on the APS unit showing the “walking man” facing the correct direction per County standards.

5 Measurement and Payment

(a) **Pedestrian push button** station and sign will be measured in units of each and will be paid for at the contract unit price per each. This price shall include furnishing and installing station and sign and programming.

(b) **Pedestrian push button control unit** will be measured in units of each and will be paid for at the contract unit price per each. This price shall include furnishing, installing, programming and testing.

(c)

Payment will be made under:

Pay Item	Pay Unit
Pedestrian Push Button	Each
Pedestrian Push Button Control Unit	Each

ORDER NO.: L89
CONTRACT ID. NO.: C000109813C01B

VIRGINIA DEPARTMENT OF TRANSPORTATION
SPECIAL PROVISION FOR

EMERGENCY VEHICLE PREEMPTION SYSTEMS

March 14, 2017

1 Description

This work shall consist of furnishing and installing emergency vehicle preemption systems in accordance with these specifications, as shown on the plans, or as directed by the Engineer.

2 Operation

(a) The Emergency Vehicle Preemption (EVP) System shall handle all emergency and transit vehicles provided with valid vehicle identification (ID).

(b) The preemption device shall work with the existing on-board equipment on Arlington County Fire Department fire trucks without modifying the existing main switch function. The device shall be capable of integrating the Automated Vehicle System application.

(c) The road-side detector shall sense and transform the signal from the on-board emitter that is to be decoded by the interface unit. The detector shall sense emitter signals over an adjustable range of 200 to 2,500 feet in optimum atmospheric conditions. The detector shall be designed for mounting at or near an intersection on mast arms, pedestals, pipes, or span wires.

(d) The interface unit shall be designed to be installed in a TS-2 traffic controller cabinet to decode the signals from the road-side detector. The interface unit shall be able to sense and distinguish between low (transit) and high (emergency vehicle) signals and shall give low/high output to the signal controller by ensuring that only authorized vehicles with valid vehicle ID are granted priority or preemption.

(e) The interface device shall be able to read, communicate, and store preemption and priority requests data to a centralized remote database management system, including but not limited to date, time, direction, and vehicle ID. A minimum 2-year warranty against defective workmanship is required.

(f) The Contractor shall notify the Engineer when optical detectors are operational for testing before final acceptance.

3 Materials

(a) A typical EVP system package includes one interface unit and two road-side detectors including two hangers, cable, and hardware.

(b) Optical detectors for emergency vehicle preemption shall be the GTT Opticom Model M711 or M721 Optical Detector or latest model, as needed. Placement of the detectors shall be determined by the Engineer.

(c) Timer modules for the EVP system shall be the GTT Opticom Discriminator, Model 764, which handles two channels of detection.

4 Execution

(a) Installation shall consist of installing detectors as shown on the plans and all associated wiring in the cabinet.

(b) The Contractor shall program the controller in accordance with Arlington County guidance.

(c) The Contractor shall ensure that the detectors and discriminator module are working properly before scheduling an inspection with the Engineer.

5 Measurement and Payment

Optical detectors will be measured in units of each and will be paid for at the contract unit price per each. This price shall include furnishing, installing, aligning, and re-aligning. When not a separate bid item, furnishing, installing, and wiring discriminator modules shall be incidental to the cost for the detectors

Emergency preemption detector controller equipment will be measured in units of each for the number of ways (directions) the system will receive inputs from emitters and will be paid for at the contract unit price per each. This price shall include furnishing and installing the detector(s), system chassis, phase selector(s), auxiliary wiring harness(s), mounting assemblies, relay(s), detector panel(s), cabinet connecting cables, transient protection and all system documentation and testing.

Emergency Preemption Detector Cable between the optical detectors and the phase selector(s)/system chassis will be measured in units of linear feet and will be paid for at the contract unit price per linear foot. This price shall include furnishing and installing conductors, markings and identifications, electrical tape and connections.

Payment will be made under:

Pay Item	Pay Unit
Optical Detector	Each
Emergency Preemption Detector Controller Equipment	Each
Emergency Preemption Detector Cable	Each

ORDER NO.: L89
CONTRACT ID. NO.: C000109813C01B

VIRGINIA DEPARTMENT OF TRANSPORTATION
SPECIAL PROVISION FOR

TRAFFIC SIGNAL CONTROL CABINETS

March 27, 2017

1 Description

This work shall consist of furnishing and installing traffic signal control cabinets in accordance with these specifications, as shown on the plans, or as directed by the Engineer.

3 General

(a) The traffic signal control cabinet assembly shall meet at a minimum all applicable sections of NEMA Standards Publication No. TS2-2003.

(b) All cabinets shall be Size P, Type TS2, and powder-coated black.

(c) Arlington County will provide the timing data three weeks after receiving a request to do so. Contact below for request:

Joshua Nicholas
Arlington County DES-TE&O
Sr. ITS & Traffic Signal Engineer
Direct: (703) 228-3861
jnicholas@arlingtonva.us

4 Operational Characteristics

(a) The controller shall operate in two distinct modes based on a user-defined software setting. The modes are pre-timed and actuated.

(b) Both operational modes shall provide for controller addressing by IP address.

(c) The controller's firmware shall be stored in non-volatile Flash random-access memory.

(d) Both operational modes shall enable data transfer via a universal serial bus (USB) data drive. The USB data drive shall be of sufficient capacity to store complete databases for all intersections. The data transfer shall be subject to the addressing scheme used by the controller and cabinet to ensure that the proper data are loaded to the controller. Data that are available for transfer in this manner shall include the controller database, event logs, conflict monitoring logs, and firmware updates.

(e) The controller shall operate in actuated control operation as defined by NEMA TS2-2003, Section 3.4, with the following:

(f) The controller shall provide for a minimum of 16 phases, 16 pedestrian, and 8º overlaps.

5 Cabinet Components and Layout

(a) The layout of the traffic signal control cabinet assembly shall conform to Section 5.2.7 of NEMA TS2-2003.

(b) The communications assembly shall be located on the left wall of the cabinet and shall be accessible without removing any parts.

(c) The tech panel shall be mounted on the inside of the cabinet door.

(d) Cabinets shall be pre-wired and tested before installation at the intersection.

(e) The Contractor shall provide documentation of the successful completion of the testing. Components shall be mounted in accordance with Arlington County

(f) Cabinets shall contain an auxiliary power strip hard wired into the cabinet circuit breaker to provide outlets for equipment.

(g) The controller interface shall meet the requirements for a Type 1 interface as defined in Section 5.3 of NEMA TS2-2003.

(h) Malfunction Management Unit

(1) The Malfunction Management Unit shall meet at a minimum the requirements of Section 4 of NEMA TS2-2003.

(2) The Malfunction Management Unit shall be of type channel-16 LE.

(i) Bus Interface Unit (BIU)

(1) The BIU shall conform to Section 5.3.1.4 of NEMA TS2-2003.

(2) The BIU rack design and signal pin assignment shall meet conform to Section 8 of NEMA TS2-2003.

(3) The BIU shall contain a ruggedized Category 5e Ethernet data connection.

(j) Port 1 communications cable shall meet conform to Section 5.3.3 of NEMA TS2-2003.

(k) Switches (general)

(1) All toggle type switches shall be heavy duty and rated 15 amps minimum. Single- or double-pole switches shall be provided as required.

(2) Any exposed terminals or switch solder points shall be covered with a non-flexible shield.

(3) All switch functions shall be permanently and clearly labeled.

(4) All wire routed to the police door-in-door and test switch pushbutton panel shall be protected against damage from repetitive opening and closing of the main door.

(l) Technician Switch Panel

A technician switch panel shall be mounted on the inside of the cabinet. The test switch panel shall contain the following at a minimum:

(1) Auto/Flash Switch

When in the flash position, power to the controller shall be maintained, and the intersection shall be placed in flash. The controller shall not be stop timed, and the cyclic operation of the controller shall not be affected when the switch is in the flash position. When the switch is returned to the auto position, the controller shall immediately initiate the start-up sequence.

(2) Stop-Time Switch

When applied, the controller shall be stop timed in the current interval.

(3) Control Equipment Power On/Off

The switch shall control the controller, conflict monitor, and cabinet power supply.

(4) Pedestrian Detector Input

On the technician switch panel, four momentary pedestrian detector inputs shall be provided.

(m) Police Door Switch Panel

The police door switch panel shall contain the following:

(1) Signals On/Off Switch

In the Off position, power shall be removed from signal heads in the intersection. The controller shall continue to operate. When in the Off position, the conflict monitor shall not conflict or require reset.

(2) Auto/Flash Switch

In the Flash position, power shall not be removed from the controller, and stop time shall be applied. If required by the signal plans and specifications, an optional RC network shall be provided to give the controller an external start pulse when the switch is returned to the Auto position, which shall force the controller to initiate the start-up sequence when exiting Flash mode.

(3) The RJ-45 port shall be installed with 6-foot category 5E cable.

(n) Generator Switch

(1) The system shall be equipped with an external generator sensing/transfer switch and keyed generator cable receptacle. If an external 120VAC generator is connected to the system, the inverter shall qualify the power from the unit and if it is within the defined parameters, derive its input from the generator, thus providing uninterrupted power to the critical load and recharging the batteries. The transition shall be accomplished without any switching or coupling (other than the cable connection) and with no interruption of power to the critical load from either failure or restoration of generator AC power.

(2) A generator access compartment with an access door shall be mounted in the top third of the main door and shall be equipped with a police key lock and two keys. A cable entryway shall be provided in the bottom of the door with a closure to fully seal the entryway when not used. A twist lock electrical connector shall be mounted to the rear wall within this compartment. The receptacle shall be an HBL-2315 or approved equivalent and shall have a full-coverage boot over the entire rear portion of the unit. The unit shall mate with the generator plugs in use by Arlington County. When the generator plug is connected to the receptacle, it shall be possible to safely close and lock the compartment door securing the system.

6 Warranty

The Contractor shall provide materials with a manufacturer's warranty/guarantee, transferable to Arlington County Department of Environmental Services, that the supplied materials are free from all defects in materials and workmanship for the stated period from the date of shipment. The Contractor shall supply the Engineer with any warranty/guarantee documents from the manufacturer and a copy of the invoice showing date of shipment.

7 Execution

(a) Installing the ground-mounted P44 Type TS-2 controller cabinet shall consist of transporting the cabinet to the specified foundation and then drilling and installing anchor bolts into the foundation, placing a sealant along the bottom flange of the cabinet, and attaching the cabinet to the foundation.

The Contractor shall complete all connections and terminations, wire all equipment in the cabinet (e.g., preemption, video detection, pushbuttons, signals), and label the cables.

(b) Installing pole-mounted controller cabinet shall consist of transporting the cabinet to the specified pole location, securing the cabinet to the pole using the approved method, drilling the pole and cabinet bottom, and installing conduit bodies and nipples with lock nuts (up to three 2- and 3-inch-pound).

The Contractor shall complete all connections and terminations, wire all equipment in the cabinet (e.g., preemption, video detection, pushbuttons, signals), and label the cables.

(c) Installing the RJ-45 connector shall consist of installing the RJ-45 connector inside the police panel as well as the Category 5e cable to connect the RJ 45. The Contractor shall provide a cut sheet for RJ-45 connector, cap, and Category 5e cable.

8 Measurement and Payment

Traffic signal controller cabinet will be measured in units of each and will be paid for at the contract unit price per each. This price shall include furnishing and installing Controller cabinets which shall include, but not be limited to, controller cabinets, back panels, power panels, detector panels, auxiliary panels, police panels, thermostatically controlled fan units in the cabinet with vent, flashers, local flasher switches, radio frequency interference filters, signal switches, main switches, police hand controls, conflict monitors, flasher relay assemblies, power relays, signal control assemblies, lamp receptacles and ground fault receptacles, circuit programs, flexible cables, grounding systems, transient protection devices, and fittings. The price shall also include implementing timing data provided by the County and training.

Payment will be made under:

Pay Item	Pay Unit
Traffic Signal Controller Cabinet	Each

ORDER NO.: L89
CONTRACT ID. NO.: C000109813C01B

VIRGINIA DEPARTMENT OF TRANSPORTATION
SPECIAL PROVISION FOR

TRAFFIC SIGNAL CONTROLLERS

March 15, 2017

1 Description

This work shall consist of furnishing and installing traffic signal controllers in accordance with these specifications, as shown on the plans, or as directed by the Engineer.

2 Materials

(a) Controllers shall be compatible with the County's Advanced Traffic Management System (ATMS) and shall be Intelight X-3 controller.

(b) Controllers shall be furnished with required D-harness adapter.

(c) Contractor shall provide copies of material warranties to the County.

3 Execution

(a) The Contractor shall notify the Engineer at least 7 working days before installing controller.

(b) The Contractor shall ensure appropriate maintenance of traffic and/or police coordination is provided while performing the installation.

(c) The Contractor shall bench test the controller before installing and shall furnish a bench test acceptance certificate to the Engineer.

(d) The Contractor shall contact the Engineer for timing data at least 3 weeks before installation.

(e) Installation of controllers shall include any hardware required and making all required connections.

(f) The Contractor shall observe the operation of the signal for at least 5 cycles following installation and shall verify that all phases are being serviced, pedestrian detection and signals are functioning properly, and that there are no safety or functional issues with the intersection before leaving the site.

(g) The Contractor shall verify controller communications with the County.

(h) The Contractor shall relocate other cabinet components as needed per Arlington County Traffic Standard 70-01. The cost of relocating cabinet components shall be incidental to the installation of the controller.

4 Measurement and Payment

Controllers will be measured in units of each and will be paid for at the contract unit price per each. This price shall include furnishing, installing, and relocating other cabinet components as needed for installation.

Payment will be made under:

Pay Item	Pay Unit
Controller	Each

ORDER NO.: L89
CONTRACT ID. NO.: C000109813C01B

VIRGINIA DEPARTMENT OF TRANSPORTATION
SPECIAL PROVISION FOR

UNINTERRUPTIBLE POWER SUPPLY

March 15, 2017

1 Description

This work shall consist of furnishing and installing uninterruptible power supplies in accordance with these specifications, as shown on the plans, or as directed by the Engineer.

2 Materials

Uninterruptible power supply (UPS) assembly includes the UPS unit, battery package, auxiliary cabinet (enclosure), and switching device. The UPS systems shall be Alpha FMX1100 type. The UPS assembly shall include, but not be limited to, the following:

(a) Inverter/charger

(b) Batteries

(1) A separate automatic and manually operated bypass switch and all necessary hardware and interconnect wiring.

(2) The UPS shall be capable of providing power for full run-time operation for an LED-only intersection (all colors: red, yellow, green, and pedestrian heads) or flashing mode operation and intersection red LEDs.

(3) The UPS shall be designed for outdoor applications.

(c) Enclosure

(1) The UPS enclosure shall be capable of being both side mounted and ground mounted.

(2) The enclosure shall house the batteries, UPS, and bypass switches. The cabinet shall meet the requirements for NEMA 3R enclosures. The housing dimensions shall be such that the housing may be easily attached to the side of an M, P, or 332 type cabinet.

(3) The enclosure dimensions shall not exceed 50 inches high by 17 inches wide by 17 inches deep.

(4) The UPS enclosure shall not interfere with the opening of the traffic cabinet door. The complete enclosure and door shall be made from 0.125-inch-thick aluminum. All external seams shall be continuously welded.

(5) The cabinet shall have a door to access the complete cabinet interior. The door shall have a three-point locking mechanism with rollers at the ends for the latch rods. The key lock shall be a Corbin cylinder lock with a #2 key. When the door is opened, it shall have stops at 90 and 130 degrees. A continuous neoprene gasket shall be used to weatherproof the enclosure when the door is closed.

(6) A fan shall be mounted in the air baffle at the top of the cabinet with an air outlet built into the overhang. The fan shall be thermostatically controlled. The bottom of the door shall be louvered to allow airflow. A removable dust filter shall be located behind the vent.

(7) The entire enclosure shall be powder-coated black aluminum.

(8) When the UPS is mounted into the enclosure, it shall be mounted to accommodate straight-on horizontal viewing of the liquid crystal display (LCD) screen on the UPS.

(9) The enclosure shall include a flush-mounted generator compartment with neoprene gaskets for weatherproofing. The generator compartment shall include a locking 30-amp plug, L5-30P, for connecting a portable AC generator. A manual transfer switch shall be mounted within the generator compartment to allow transferring from utility power to generator power. The generator door shall have a cable slot to allow the door to be closed when the generator is plugged in and the cable to be locked inside the compartment. The door shall include a Corbin Type 2 lock.

(10) The cabinet shall be mounted to the traffic control cabinet with six hex-head bolts, 1/4 inch by 20 inches. All holes shall be field drilled by the Contractor to accommodate the situation. A grommet shall be supplied to protect the cable in a field-drilled 1.5- to 2-inch hole for cable connection to the existing traffic controller. The Contractor shall supply all the mounting hardware, bolts, washers, nuts, gaskets, bushings, grommets, caulking, and similar items necessary to install the cabinet in a safe and weatherproof manner.

(d) Battery system

(1) Individual batteries shall be as follows:

(i) Voltage rating: 12V type

(ii) Amp-hour rating: 100 amp-hours minimum

(iii) Group size: 31 minimum

(2) Batteries shall be easy to replace and available commercially off the shelf.

(3) UPS assemblies shall consist of four to eight batteries. All batteries shall meet specifications out of the box immediately after the initial 24-hour top-off charge. Batteries that require cycling to meet the amp-hour rating specifications are not acceptable.

(4) Batteries shall be deep discharge, sealed prismatic lead-calcium-based, gelled electrolyte/valve-regulated lead acid. Batteries designed for cycle applications, such as solar, are not acceptable. Batteries shall be designed for standby applications.

(5) Batteries shall be certified by the manufacturer to operate over a temperature range of –25 to +74ºC.

(6) The batteries shall be provided with appropriate interconnect wiring and corrosion-resistant mounting trays, shelves, and/or brackets appropriate for the cabinet into which they will be installed.

(7) Batteries shall indicate maximum recharge data and recharging cycles.

(8) Battery interconnect wiring shall be via two-part modular harness.

(i) Part I shall be equipped with red (+) and black (−) 30.48 cm (12-inch) cabling that can be permanently connected to the positive and negative posts of each battery. Each red and black pair shall be terminated into an Anderson-style power pole connector or equivalent.

(ii) Part II shall be equipped with the mating power pole style connector for the batteries and a single, insulated power pole style connection to the inverter/charger unit. The harness shall be fully insulated and constructed to allow batteries to be quickly and easily connected in any order to ensure proper polarity and circuit configuration.

(9) Power pole connectors may be one- or two-piece. If a two-piece connector is used, a locking pin shall be used to prevent the connectors from separating.

(10) All battery interconnect harness wiring shall be UL Style 1015 Canadian Standards Association (CSA) thermoplastic equipment wire or welding-style cable or equivalent, all of proper gauge with respect to design current and with sufficient strand count for flexibility and ease of handling.

(11) Battery terminals shall be covered and insulated with molded boots to prevent accidental shorting.

(12) A battery balancer shall be provided that automatically balances the battery's charging voltage on all batteries in the string to within ±60mV between any two batteries. The balancer shall allow any single 12V battery within the battery string to be replaced at any time during the warranty period and not require the purchase of new batteries.

3 UPS Operation

(a) The UPS shall provide a minimum of 6 hours of full run-time operation with an additional 2 to 4 hours of red flash operation for an LED-only intersection, with a maximum 800W active output load capacity. The inverter, when on batteries, shall operate with a minimum efficiency of 84% with a load from 25% to 90% of the UPS total output rating. The UPS shall operate at 97% or higher when operating under normal conditions (i.e., utility power is available).

(b) The UPS shall operate with a nominal 48VDC bus. A DC level higher than 56VDC will be considered unsafe and unacceptable.

(c) The maximum transfer time allowed, from disruption of normal utility line voltage to stabilized inverter line voltage from batteries, shall be 5 milliseconds. A 5-millisecond maximum allowable transfer time shall also apply when switching from inverter line voltage to utility line voltage.

(d) The UPS shall include a rack-mounted Fail Safe Automatic/Manual Transfer Switch (FS-ATS) for bypassing the UPS for maintenance. The FS-ATS shall be a three-stage configuration: UPS normal mode, bypass UPS on, and bypass UPS off. The FS-ATS shall be mounted on a 19-inch rack inside the UPS side-mount enclosure.

(e) The BBS shall have six sets of normally open (NO) and normally closed (NC) single-pole double-throw, individually programmable, dry-relay contact closures, available on a front panel-mounted terminal block. These contact closures shall be rated at a minimum of 120V/1A and labeled so each contact can be identified.

(f) One set of NO and NC contact closures shall be energized when the unit switches to battery power. Contact shall be labeled or marked "On Batt."

(g) A second and third set of NO and NC contact closures shall be energized whenever the battery approaches approximately 40% of remaining useful capacity. Contact shall be labeled or marked "Low Batt." This setting shall be adjustable from 10 to 90% via the RS-232 connection.

(h) A fourth set of NO and NC contact closures shall be energized 2 hours after the unit switches to battery power. Contact shall be labeled or marked "Timer." This setting shall be adjustable from 1 minute to 8 hours via the RS-232 connection.

(i) A fifth set of NO and NC contact closures shall be energized if an alarm condition occurs. Contact shall be labeled "Alarm."

(j) A 48VDC output shall be provided for operating an external fan. The output can also be factory configured as a dry contact.

(k) Relay contact activation shall be annunciated on the front panel via a visual indication. The indication may be a discrete LED or part of the LCD screen.

(l) The BBS shall have two timers, independently programmable from 0 to 8 hours with two times-of-day restrictions on each timer, with dry contacts to activate red flash operation at user-definable times of day.

(m) The BBS shall allow three user inputs to support Intrusion Alarm, Emergency Power Off, and external self-test (battery test).

(n) Operating temperature for both the inverter/charger and manual bypass switch shall be –37 to +74ºC with a load of 850W.

(o) The FS-ATS shall be rated at 240VAC/30 amps, minimum.

(p) The BBS shall use a temperature-compensated battery charging system. The charging system shall compensate over a range of 2.5 to 6.0mV / ºC per cell. The temperature sensor shall be external to the inverter/charger unit. The temperature sensor shall come with 3 meters (9 feet and 10 inches) of wire.

(q) Batteries shall not be recharged when battery temperature exceeds 50ºC ± 3ºC.

(r) The BBS shall bypass the utility line power whenever the utility line voltage is outside the voltage range of 85VAC to 175VAC (± 2VAC). During a utility input from 85VAC to 175VAC, the UPS shall use its internal double-buck, double-boost regulation to maintain a 108VAC to 131VAC output to the controller cabinet without the use of the batteries. The BBS shall go into Boost Mode 1 when the AC line voltage drops below 110VAC, ± 2VAC. When the AC line drops below 96VAC, ± 2VAC, the BBS shall go into Boost Mode 2. When the AC line voltage reaches 131VAC, ± 2VAC the BBS shall go into Buck Mode 1. When the AC line voltage reaches 150VAC, the BBS shall go into Boost Mode 2.

(s) When using battery power, the BBS output voltage shall be between 110VAC and 128VAC, pure sine wave output, ≤ 3% THD, 60Hz ± 3Hz.

(t) The BBS shall be compatible with NEMA 170 or 2170 controllers and cabinet components for full-time operation. All loads to the maximum rating of the BBS shall be powered through the BBS system to use the UPS internal buck/boost regulation.

(u) In cases of low (below 85VAC) or absent utility line power, when the utility line power has been restored to normal for more than 3 seconds, the BBS shall transfer from the boost regulation mode or the battery-backed inverter mode back to utility line mode.

(v) In cases of high utility line power (above 175VAC), when the utility line power has been restored to normal for more than 3 seconds, the BBS shall transfer from the buck regulation mode or battery-backed inverter mode back to utility line mode.

(w) The BBS shall be equipped to prevent a malfunction feedback to the cabinet or from feeding back to the utility service. For conformation, the UPS module shall be UL/CSA approved and labeled. “Tested to” or “Built to” UL/CSA is not acceptable.

(x) In the event of inverter/charger failure, battery failure, or complete battery discharge, the FS-ATS shall revert to the NC (and de-energized) state if utility line power or generator power us available and connected to the cabinet.

(y) Recharge time for the battery, from “protective low-cutoff” to 90% or more of full battery charge capacity, shall not exceed 8 hours, unless limited by the temperature-regulated charger due to excessive battery heat that could damage the integrity of the battery string.

(z) Batteries shall be deep discharge gel-type valve-regulated lead acid batteries and compatible with the battery charger.

4 Maintenance, Displays, Controls, and Diagnostics

(a) The BBS shall include a display and/or meter to indicate current battery charge status and conditions.

(b) The BBS shall have voltmeter standard probe input jacks (+) and (-) to read the exact battery voltage drop at the inverter input.

(c) The BBS shall have lightning surge protection compliant with ANSI/IEEE C.62.41, IEEE Recommended Practice on Characterization of Surges in Low-Voltage (1000V and Less) AC Power Circuits.

(d) The BBS shall be equipped with an integral system to prevent batteries from destructive discharges and overcharges.

(e) The BBS and batteries shall be easily replaced with all needed hardware and shall not require any special tools for installation.

(f) The BBS shall display via an LCD panel the number of times the BBS was activated and the total number of hours the unit has operated on battery power. The LCD display shall show the UPS mode, alarm status, input and output voltages, output current, battery voltage, battery charger current, and last event. It shall allow the battery charger to be programmed from 3-, 6-, and 10-amp charger settings.

(g) The BBS shall include two separate communication ports on the front panel of the UPS, a factory-installed internal Ethernet port for Simple Network Management Protocol / Web communications, along with an RS-232 port for local communications.

(h) The BBS shall include a Microsoft Windows Graphical User Interface for programming and monitoring the BBS. The interface shall be provided in addition to HyperTerminal at no cost.

(i) The manufacturer shall include a set of operation manuals and wiring diagrams of the BBS with each BBS. Two sets of maintenance manuals, an equipment list, and the battery data sheets shall be provided upon request for evaluation purposes.

5 Execution

(a) Production quality control tests shall be performed on each new system before shipment. Failure to meet these requirements shall be cause for rejection. Each system shall be visually inspected for any exterior physical damage or assembly anomalies. Any defects shall be cause for rejection.

(a) The auxiliary cabinet shall be mounted to the traffic control cabinet with six hex-head bolts, 1/4 inch by 20 inches. All holes will be field drilled by the Contractor to accommodate the situation. Field drill a 1.5- to 2-inch hole for cable connection to the existing traffic controller. The Contractor shall supply and install all the mounting hardware, bolts, washers, nuts, gaskets, bushings, grommets cable protection, caulking, and similar items necessary to install and weatherproof the cabinet.

(i) The Contractor shall confirm, before drilling into existing cabinet, that the UPS will not interfere with access to the cabinet, or present a clearance issue by blocking sidewalk or curb ramps.

(d) The Contractor shall test UPS operation before scheduling inspections

6 Warranty

(a) Manufacturers shall provide a 2-year factory-repair warranty for parts and the Contractor shall transfer the warranty to the County upon acceptance.

(b) Batteries shall be warranted for full replacement for 4 years from date of purchase with an additional 1 year added when a battery balancer is installed at time of initial installation. A battery shall be considered bad if it does not deliver 80% of its original capability within the warranty period.

7 Measurement and Payment

Battery Backup UPS will be measured in units of each and will be paid for at the contract unit price per each. This price shall include furnishing and installing UPS unit, battery package, auxiliary cabinet, switching device, all batteries and harnesses, and warranty.

Payment will be made under:

Pay Item	Pay Unit
Battery Backup UPS for Traffic Signal	Each

ORDER NO.: L89
CONTRACT ID. NO.: C000109813C01B

VIRGINIA DEPARTMENT OF TRANSPORTATION
SPECIAL PROVISION FOR

THERMAL VIDEO DETECTION CAMERAS

March 15, 2017

1 Description

This work shall consist of furnishing and installing thermal video detection cameras in accordance with these specifications, as shown on the plans, or as directed by the Engineer.

2 Materials

(a) Thermal traffic cameras shall be forward-looking infrared (FLIR) FC-Series model FC-334T, FC-348T, FC-324T, or approved equivalent.

(b) Communication boards shall be FLIR brand ViewCom/E MAX+ or approved equivalent.

(c) Thermal traffic cameras shall not depend on any visible or invisible (infrared) illumination or image intensifier to function (i.e., produce images). Thermal traffic cameras shall be totally passive and not produce any energy or emit light any bandwidth. Thermal traffic cameras shall allow the user to clearly identify images in the total absence of light.

(d) Thermal traffic cameras shall feature both white-hot and black-hot operating modes. In the white-hot mode (default), warmer objects are displayed in white and lighter shades than cooler or background areas. In the black-hot mode, warmer images are displayed as black or dark gray compared to cooler background objects.

(e) Thermal traffic cameras shall provide standard NTSC or Phase Alternating Line analog composite video output factory-configured to allow them to function as direct replacements for daylight cameras, and to connect directly to industry standard video detection software cards and recording devices. The analog video signal shall be available via both a Bayonet Neill–Concelman video output connector and a connector free terminal block. The video outputs shall be surge protected.

(f) Thermal traffic cameras shall be furnished in an IP-66-rated outdoor enclosure with sunshield and mounting base. The mounting base shall be provided with 1/4-inch by 20-inch holes for mounting to a pedestal or wall mount. All cable connections shall be made inside of the enclosure. The enclosure shall be provided with liquid-tight sealed cable gland fittings for the video and power cables.

(g) Camera enclosures shall include grounding and surge protection. A separate earth-ground connection shall be made inside the enclosure to a designated grounding lug. The earth-ground conductor may be part of the power cable bundle.

(h) Thermal traffic cameras shall operate on surge-protected 110/220VAC.

3 Warranty

(a) The supplier shall provide a limited 2-year warranty on the thermal traffic detection camera.

(b) The thermal detector in the thermal traffic camera core shall have a 10-year warranty.

(c) The Contractor shall supply copies of all warranties to the County before final acceptance.

4 Execution

(a) Thermal detection camera installation shall include:

(1) Mounting the camera on mast arm or pole

(2) Pulling the thermal detector lead-in cable back to the cabinet

(3) Terminating the cables into the appropriate detection rack including all connectors and hardware required to make the connections

(1) Configuring the detection zones and verifying that the output is mapped to the correct phase on the controller.

(2) Testing the detection to ensure that the zones are configured to correctly detect vehicles.

(b) Thermal detection communication board installation shall include:

(1) Installation of the ViewCom/E MAX+ board into the cabinet along with all required connections (connection to switch as well)

(2) Verification with Arlington County staff at Traffic Management Center that the board is correctly relaying video feeds to the central system

5 Measurement and Payment

Thermal traffic detection cameras will be measured in units of each and will be paid for at the contract unit price per each. This price shall include furnishing, installing, aligning, and testing.

Thermal camera lead-in cables will be measured in linear feet and will be paid for at the contract unit price per linear foot. This price shall include furnishing and installing.

Thermal camera interface equipment will be measured in units of each and will be paid for at the contract unit price per each. This price shall include furnishing and installing and connecting internal wiring.

Payment will be made under:

Pay Item	Pay Unit
Thermal Traffic Detection Camera	Each
Thermal Camera Lead-in Cable	Linear Foot
Thermal Camera Interface Equipment	Each

ORDER NO.: L89
CONTRACT ID. NO.: C000109813C01B

VIRGINIA DEPARTMENT OF TRANSPORTATION
SPECIAL PROVISION FOR
PUBLIC ART

September 28, 2017

Arlington County has procured public art to be incorporated into the project through a separate contract with Cliff Garten and Associates, Inc. ("Artist"). The "Artwork" shall consist of four sculptures (see Arlington Light plans and calculations also named Luminous Bodies). The Artist shall be responsible for fabricating, transporting, storing, and installing the Artwork. The Contractor shall construct the Artwork foundations, lighting conduit, lighting junction boxes, and lighting control cabinet housing (ready for wire installation by the Artist), as part of this contract (Route 29 Improvement Project).

1. Coordination

   The Contractor shall attend design and construction coordination meetings with the County, Artist, Engineer and other parties, as appropriate, to discuss and coordinate the Artwork installation.
   The Artist will be on site to coordinate the Contractor's installation of all specified conduits, junction boxes, and cabinet for the Artworks.

   The Artist will provide an installation template for the bolt patterns and the foundation embeds to the Contractor.
   The Contractor shall provide copies of existing designs, drawings, specifications, reports, and other existing relevant data, if any, which are required for installation of the Artwork to the Artist.
   The Contractor shall develop a schedule in coordination with the Artist and Arlington County and ensure that the site is ready for Artwork installation by the agreed upon date scheduled for such installation. The submitted general construction schedule shall include line items for the Artwork installation.
   If an event occurs that impacts the installation schedule, then the Contractor shall notify the County at least three days prior to such event (if such event is known in advance) or immediately after the event if the event is not known in advance. If the delay is a result of the Contractor's action or inaction, then the Contractor will be responsible for any appropriate storage fees.
   The Contractor shall construct foundations, drainage for foundations, provide and install electrical conduit and stainless steel base rim plates for the Artwork in consultation with the Artist.
   The Contractor shall coordinate closely with the Engineer, Arlington County, and the Artist to ascertain that the Site is prepared to receive the Artwork. The Contractor shall notify the County of any adverse conditions at the Site that would affect or impede the installation of the artwork.
   The Contractor shall be present at the Site throughout installation.

2. Measure and Payment

   Public art coordination will not be measured for separate payment. The cost of this work shall be incidental to the contract unit prices of furnishing and installing Artwork foundations, lighting conduit, and lighting control cabinet.

ORDER NO.: L89
CONTRACT ID. NO.: C000109813C01B

VIRGINIA DEPARTMENT OF TRANSPORTATION
SPECIAL PROVISION FOR

ARLINGTON COUNTY SANITARY SEWERS & APPURTENANCES

January 30, 2017

PART 1 - GENERAL

1.1 Description of Work

This work shall consist of furnishing and installing sanitary sewer pipe and appurtenances as shown on the plans, in accordance with these specifications and as directed by the Engineer.

1.2 Applicable Specifications

A. American National Standards Institute (ANSI)

B. American Society for Testing and Materials (ASTM)

C. American Water Works Association (AWWA)

1.3 Applicable Reference

A. Arlington County Plumbing Code (Chapter 18 of the Arlington County Code)

B. Arlington County Utilities Code (Chapter 26 of the Arlington County Code)

C. Plumbing Code adopted by the State of Virginia

D. Erosion and Sediment Control Ordinance (Chapter 57 of the Arlington County Code)

E. Virginia Department of Conservation and Recreation Erosion & Sediment Control Handbook

F. Virginia Department of Health (VDH) and State Water Control Board Sewerage Regulations (VR 355-17-000) [Section 62.1-44.19(8) of the Virginia Code].

1.4 Submittals

Submit full descriptions and details of all materials, and appurtenances proposed for the project in accordance with Arlington County Construction Standards and Specifications Section 01300 Submittals

1.5 Quality Assurance

A. Sanitary Sewer Field Tests
Conduct field tests as specified in paragraph 3.3.

B. Force Main Field Tests
Hydrostatic testing of force mains shall conform to the hydrostatic testing specifications of the Special Provision for Arlington County Water Mains & Appurtenances, except that the entire force main may be pressure tested at one time.

1.6 Definitions

Terminal Sewer – Any sewer which has no other common sewers discharging into it.

PART 2 - MATERIALS

2.1 Polyvinyl Chloride pipe (PVC)

PVC pipe shall be as specified in Section 02500 Gravity Sewers and Appurtenances.

2.2 Concrete Pipe

Concrete pipe smaller than 12-inch shall not be used as sanitary sewer pipe. Concrete pipe shall be as specified in Section 02500 Gravity Sewers and Appurtenances.

2.3 Ductile Iron Pipe (DIP)

Ductile iron pipe shall conform to AWWA C-151 (ANSI A21.51), minimum class 52. Pipe lining shall be corrosion resistant to sewer gas, sewpercoat, protecto 401 or approved equal and shall have mechanical or push-on joints utilizing rubber gasket rings conforming to AWWA C-111 (ANSI A21.11). Fittings shall be ductile-iron, mechanical joint conforming to AWWA C-110 (ANSI A21.10) with double cement lining. Force mains shall be minimum class 52 ductile iron pipe.

2.4 Vitrified Clay Pipe

Vitrified clay pipe shall not be used as sanitary sewer pipe.

2.5 Asbestos-Cement Pipe

Asbestos-cement pipe shall not be used as sanitary sewer pipe.

2.6 Manhole Frames and Covers

5. Manhole frames and covers shall conform to Section 302 of the Specifications, or as specified on the plans.

6. Manhole covers shall be watertight.

7. Manhole frames and covers shall be constructed of gray or ductile iron conforming to ASTM A48 and A536.

8. Frames and covers shall have machined bearing surfaces to prevent rocking and rattling under traffic.

9. Manhole covers shall be as shown on the Arlington County DES Section S Sanitary Sewer Standard Details and as indicated on the Contract Drawings. Frames and covers shall be manufactured by Dewey Brothers Inc., or equal.

2.7 Manhole Steps

Manhole steps shall be a composite of a No. 3 grade 60 deformed steel bar encased in a copolymer polypropylene plastic of the “press-fit” design or rubber conforming to Section 302 of the Specifications and Arlington County DES Standard Detail Drawing M-2.0.

PART 3 - EXECUTION

3.1 Sanitary Sewer Installation

Sanitary sewers shall be installed in accordance with Arlington County Standard Details and Specifications, the Virginia Department of Health and State Water Control Board Sewerage Regulations, Water Pollution Federation Standards, the Uniform Statewide Building Code of Virginia, and Sections 302, 303, & 520 of the Specifications.

3.2 Sewer Service Connections

Sewer service connections to the sanitary sewer main shall be made only by a licensed plumber and in accordance with the Plumbing Code adopted by the State of Virginia and the Arlington County Plumbing Code. No sewer service connections shall be made within 2 feet of any joint in the sanitary main or within 5 feet along the pipe leading from a terminal manhole. The minimum allowable distance between sewer service connections at the sewer main shall be 3 feet. No house service lateral shall be connected to an existing manhole without the special approval of DES.

3.3 Sanitary Sewer Acceptance Tests

A. General: Acceptance tests shall not be made until all sanitary sewer pipes, manholes and required building spurs have been installed, and the pipe trenches are backfilled to the finished grade and compacted. The Contractor may perform preliminary tests at his own discretion without the presence of the Engineer before backfilling sanitary sewer sections. The Contractor shall schedule the final acceptance tests with the Engineer at least 48 hours in advance. Final acceptance tests shall be performed in the presence of the Engineer or his duly authorized representative. Sewer pipes shall be tested from manhole to manhole or from manhole to terminus. Sections passing the acceptance tests shall continue to be maintained by the Contractor until a satisfactory final inspection of the entire sewer system is completed.

B. Low Pressure Air Tests: Sanitary sewer sections of one diameter only and above the ground water table shall be tested using low air pressures after completion of backfill and before hookup of house connections. Temporarily cap and securely brace all laterals for the test. Inspect sewers and manholes before testing and remove all soil and debris by thoroughly flushing the lines. Dispose of soil and debris without using the existing sewer system. Provide and securely brace test plugs at each manhole. After all personnel are removed from manholes, add air slowly to the portion of the pipe being tested until internal air pressure is held at a test pressure of 4.0 pounds per square inch (psi) for a minimum of two minutes. Pressure gauges used in the air test procedure shall be calibrated in divisions of 0.10 psi.

If, in the Engineer's opinion, there is any indication of leakage at the test plug, relieve the internal pressure before taking steps to eliminate the leak. After the two-minute holding period at 4.0 psi, disconnect hose and compressor from the pipe section being tested. If pressure decreases to 3.5 psi, observe and record the time required for the pressure to drop 1.0 psi from 3.5 to 2.5 psi. Pipes failing to maintain minimum acceptable holding times in accordance with the most current version of ASTM-C828 will not be accepted.

C. Mandrel Testing: All PVC sewer lines shall require Mandrel testing in addition to air test acceptance to determine if they are within the allowable deflection tolerance. The Contractor shall perform the deflection test by utilizing an approved go/no go multi-arm mandrel which meets ASTM D-3034 dimensions for 7.5 percent deflection limit.

D. Manhole Testing: Manholes shall be tested using one of the methods listed below. Manholes may be tested for leakage at the same time that gravity sewer lines are being tested for leakage. Manhole inverts shall be completed before testing is performed.

a. Vacuum testing shall include vacuum pump, certified vacuum gauge with a range of 0 to 30 inch mercury (Hg.), sealing element with manhole support brace and air pressure to monitor the inflatable sealing ring. Evacuate the manhole to 10 inches Hg. for the specified test period using the chart provided. If the vacuum drops less than one inch mercury within the test time the manhole is considered acceptable.

b. When exfiltration testing is used, the allowable leakage shall not exceed one-half gallon per hour. This equates to 0.25 or 1/4-inch per four hour test period. The inflatable plugs or stoppers shall be positioned in the lines far enough from the manhole to ensure testing of those portions of the lines not air tested. The manhole shall then be filled with water to the top of the manhole rim. A 24-hour soak shall be allowed prior to testing. After test completion the water shall be pumped from the manholes and disposed of properly.

c. Under no circumstances shall water be allowed to enter the existing sanitary sewer system. If water drop in manhole exceeds the allowable leakage during the test period the Contractor shall make repairs or replacement at no cost to the County and retest as specified above.

E. In addition to passing air test requirements, sanitary sewer sections below the ground water table shall be tested using the following infiltration test procedure

a. Plug upper section of pipe system after flushing and cleaning section in conformance with paragraph B above. Place a weir in the downstream invert of pipe in a plumb and level position. Read the infiltration after an elapsed time of 30 minutes with the line of sight level to the weir line. Flow rates shall not exceed 100 gal./day/inch of diameter/mile. Readings that exceed 100 gal./day but are below 1,500 gal./day shall be re-measured using a weir with spout such as the –"Pomon-o-Weir" or equivalent.

F. Sewer sections containing a large amount of lateral volume or sewer sections partially submerged shall be air-tested using the appropriate criteria stipulated in ASTM Designation C-828 to ensure accuracy of the test procedure.

VACUUM TEST TABLE
Specified test period for vacuum to
Drop less than one-inch mercury

Manhole Depth In Feet	**4-Foot Inside Diameter (seconds)**	**5-Foot Inside Diameter (seconds)**	**6-Foot Inside Diameter (seconds)**
8	20	26	33
10	25	33	41
12	30	39	49
14	35	46	57
16	40	52	65
18	45	59	73
20	50	65	81
22	55	72	89
24	59	78	97
26	64	85	105
28	69	91	113
30	74	98	121

AIR TEST TABLE
Based on Equations from ASTM C828

SPECIFICATION TIME (min:sec) REQUIRED FOR PRESSURE DROP
FROM 3-1/2 to 2-1/2 PSIG WHEN TESTING ONE PIPE DIAMETER ONLY

PIPE DIAMETER, INCHES

PIPE LENGTH, (FEET)	4	6	8	10	12	15	18	21	24
25	0:04	0:10	0:18	0:28	0:40	1:02	1:29	2:01	2:38
50	0:09	0:20	0:35	0:55	1:19	2:04	2:58	4:03	5:17
75	0:13	0:30	0:53	1:23	1:59	3:06	4:27	6:04	7:55
100	0:18	0:40	1:10	1:50	2:38	4:08	5:56	8:05	10:34
125	0:22	0:50	1:28	2:18	3:18	5:09	7:26	9:55	1:20
150	0:26	0:59	1:46	2:45	3:58	6:11	8:30		
175	0:31	1:09	2:03	3:13	4:37	7:05			
200	0:35	1:19	2:21	3:40	5:17				
225	0:40	1:29	2:38	4:08	5:40				
250	0:44	1:39	2:56	4:35					
275	0:48	1:49	3:14	4:43					
300	0:53	1:59	3:31						
350	1:02	2:19	3:47						
400	1:10	2:38							
450	1:19	2:50							
500	1:28	2:50	3:47	4:42	5:40	7:05	8:30	9:55	11:20

PART 4 - MEASUREMENT AND PAYMENT

Sewer service connections will be measured in linear feet along the center line of the main sewer, from the center line of main sewer to the end of the cap of where tied into the existing line and will be paid for at the contract unit price per linear foot. This price shall include obtaining the plumbing permit, excavating sewage, backfilling, tapping main sewer, furnishing and installing pipe and fittings, and all cap work.

Sanitary Sewer Force Mains will be measured and paid for in accordance with Section 520 of the Specifications and shall also include thrust blocks, anchorage, and any other restraint required.

Drop connections (size and depth) will be measured in units of each and will be paid for at the contract unit price per each. This price shall include all materials, labor and incidentals necessary for a complete and operable installation.

Sanitary Sewer Replace Existing Manhole will be measured in units of each and will be paid for at the contract unit price per each. This price shall include excavating, removing and disposing of existing manhole, furnishing, installing, backfilling, and testing.

Payment will be made under:

Pay Item	**Pay Unit**
Sewer service connection	Each
Drop Connection	Each
Sanitary Sewer Replace Existing Manhole	Each

ORDER NO.: L89
CONTRACT ID. NO.: C000109813C01B

VIRGINIA DEPARTMENT OF TRANSPORTATION
SPECIA PROVISION FOR

FIBER OPTICS

March 31, 2017

FACTORY TERMINATED PATCH PANEL ASSEMBLY

General

This work shall consist of furnishing and installing factory terminated patch panel assemblies in a protective housing as shown on the plans, in accordance with the Specifications, and as directed by the Engineer. The cable shall consist of 12 fibers in a single buffer tube, a dielectric strength member, and a protective outer jacket. The fibers shall be single mode with attenuation not exceeding 0.35 dB/km at 1310 nm. The panel shall consist of LC type connectors. Label all fiber-optic connectors, whether on jumpers, connector panels, or other equipment, to prevent improper connection. Obtain the Engineer's approval of the fiber-optic connectors labeling method. Coil twenty five (25) feet of slack cable on each end of the splice enclosure.

Construction

The Contractor shall perform the work in accordance with Section 808 of the Specifications and TS7-20 details.

Measurement and Payment

Factory Terminated Patch Panel Assembly will be measured in units of each of the length specified and will be paid for at the contract each price. This price shall include furnishing, installing, labeling, and testing.

Payment will be made under:

Pay Item	Pay Unit
Factory Terminated Patch Panel Assembly (Length)	Each

CORETEC UNIVERSAL DIGITAL VIDEO CODEC

Description

This work shall consist of furnishing and installing field hardened single channel model VCX-7401 Coretec CODECs as shown on the plans, in accordance with the Specifications, and as directed by the Engineer.

Detailed Specifications:

Video:

Input and Output

# of channels 1 in; 1 out Composite BNC
Standards NTSC (EIA RS-170)
PAL (CCIR 624)
Voltage 1 volt p-p 75Ω 50/60HZ
Compression H.264 (High Profile SD 3.1)
MPEG4 (ISO/IEC 14496 [ASP])
MPEG2 Elementary (ISO 13818-2)
JPEG snapshot (FTP transfer)
Resolution & Maximum Frame Rate
NTSC 1-30 fps PAL
D1 720 x 480 720 x 526
CIF 352 x 240 352 x 288
QCIF 176 x 120 176 x 144
Data Range 56 Kbps to 5 Mbps
Storage Removable SD or HDSD Card

Serial Data:

Protocol RS-422/485
Programming RS-232/422
Data Rate 9.6 to 57.6 Kbps (NRZ)
Connectors RJ-45, USB 2.0

Network:

Ethernet 10/100BaseT, 100Base-FX, 100Base-SX (IEEE802.3/802.3u)
Interface RJ-45, USB 2.0
Protocols Ipv.4, UDP, TCP, RTP, RTSP, HTTP, FTP, TFTP, SNMP 2.0, IGMP V2
Multicast, SMTP, SAP, ICMP, ARP
23

Programming & Diagnostics:

Modes
Physical RS-232 programming port
Remote Telnet, Web Interface, SNMP
Visual
LED’s Video Loss, Data, Power

Electrical:

Voltage 9-48 VDC, 9-35 VAC
Power Consumption <10W

Mechanical:

Dimensions
Mini-Module 5.88”W x 1.75”H x 6.14”D
Card 5.5”W x 11”H
Weight <2 lbs.

Environmental & Regulatory:

NEMA TS2 Shock, Vibration and Transients
Temperature (-)36ºC to +74ºC (Operating)
(-)40ºC to +74ºC (Storage)
Humidity 0 to 95% Non-condensing
(Conformal Coating Available Upon request)

Construction

The Contractor shall perform the work in accordance with Section 803 of the Specifications and TS7-14 details.

Measurement and Payment

Coretec Universal Digital Video CODEC will be measured in units of each and will be paid for at the contract each price. This price shall include furnishing, installing, labeling, and testing.

Payment will be made under:

Pay Item	Pay Unit
Coretec Universal Digital Video CODEC	Each

COMNET CNGE2FE16MS MANAGED ETHERNET SWITCH

Managed Ethernet Switch with (16) 10/10TX + (2) Configurable 10/100/1000TX / 100/1000FX Ports

This work shall consist of furnishing and installing ComNet model CNGE2FE16MS Managed Ethernet Switches as shown on the plans, in accordance with the Specifications, and as directed by the Engineer.
Functional Requirements:

1. Environmentally hardened for direct deployment in difficult unconditioned out-of-plant and roadside installations.

2. Tested and certified by an independent laboratory for full compliance with the environmental requirements (ambient operating temperature, mechanical shock and vibration, humidity with condensation, high-line/low-line voltage conditions, and transient voltage protection) of NEMA TS-1/TS-2 and CALTRANS Traffic Signal Control Equipment Specifications.

3. Compliant with EN60950-1 and UL Class 1, division 2, Groups A, B, C and D for Hazardous Locations.

4. Extended ambient operating temperature range: -40ºC to +75ºC (Functional to 85ºC)

5. 10/100 BASE-TX and 100/1000 BASE-FX compatible

6. Flexible optics configuration via SFP plug-in modules

7. DIN rail or wall-mountable mounting

8. Redundant power supply compatibility reduces possibility of single-point-of-failure for highest possible reliability

9. Fully configurable through web-based or SNMP network management

10. IGMP Snooping V1/V2 for multicast filtering and IGMP Query V1/V2 20

11. Port based VLAN (IEEE 802.1Q)

12. Rapid Spanning Tree protocol (IEEE 802.1W)

13. Power Supply Included

14. Lifetime Warranty

Construction

Work shall be in accordance with Section 809 of the Specifications and TS7-17 details .

Measurement and Payment

Managed Ethernet Switch will be measured in units of each and will be paid for at the contract each price. This price shall include furnishing, installing, labeling, and testing.

Payment will be made under:

Pay Item	**Pay Unit**
Managed Ethernet Switch	Each

FIBER-OPTIC SPLICE ENCLOSURE

This work shall consist of furnishing and installing Fiber Optic Splice Enclosures as shown on the plans, in accordance with the Specifications, and as directed by the Engineer.

General

1. Furnish splice enclosures that are re-enterable using a mechanical dome-to-base seal with a flash test valve, and that are impervious to the entry of foreign material (water, dust, etc.). Ensure that enclosures are manufactured in such a manner to be suitable for junction box and manhole installation.

2. Provide enclosures with a minimum of one over-sized oval port that will accept two cables and with a minimum of four round ports (for single cables) which will accommodate all cables entering the enclosure. Provide gel-sealing or heat shrink cable shields with the enclosure to ensure that a weather tight seal where each cable enters the enclosure.

3. Within enclosures, provide the minimum necessary number of hinged mountable splice trays to store the number of splices required, plus the capacity to house six additional splices. Provide a fiber containment basket for storage of loose buffer tubes that are expressed through the enclosure. Ensure that enclosures allow sufficient space to prevent micro bending of the buffer tubes when coiled.

4. Provide splice trays that hold, protect, and organize optical fibers, and that secure fibers inside the splice tray.

5. Provide splice trays that are dielectric.

6. Provide splicing enclosures and associated equipment with an operating temperature of - 20 to 160 degrees F.

Termination and Splicing within Splice Enclosure

1. Install fiber optic splice enclosures to meet the following specifications:

2. Install splice enclosures with splice trays and all other necessary hardware.

3. According to the Plans, fusion splice and secure SMFO cable in splice trays inside the splice enclosure.

4. For all buffer tubes designated to be expressed (not cut) through the splice enclosure, neatly coil the excess tubing inside the basket provided with the enclosure.

5. Ensure that all buffer tubes are contained within the splice tray so that no bare fibers are outside the tray.

6. Do not damage the fiber or exceed the minimum bending radius of the fiber.

7. Label all fiber-optic splices. Obtain the Engineer's approval of the method of labeling all fiber-optic connections.

8. Install gel-sealing or heat shrink cable shields using methods recommend by the manufacturer of the enclosure. Perform a pressurization flash test on the enclosure in accordance with the manufacturer's recommend procedures at the conclusion of the splicing procedure and prior to the final placement of the enclosure.

9. Place the enclosure along with required spare cables in the facility in a neat and workmanship like manner and insure that no standing water remains in junction box. Do not place the splice enclosure in bottom of junction box. Do not damage cable or violate the minimum bending radius of the cable.

10. Coil twenty five (25) feet of slack cable on each end of the splice enclosure.

Construction

The Contractor shall perform the work in accordance with Section 808 of the Specifications and TS7-19 details.

Measurement and Payment

Fiber Splice Enclosure (Size) will be measured in units of each of the length specified and will be paid for at the contract each price. This price shall include furnishing, installing, labeling, and testing.

Payment will be made under:

Pay Item	**Pay Unit**
Fiber Splice Enclosure (Size)	Each

FIBER-OPTIC SPLICING

This work shall consist of splicing Fiber Optic cables as shown on the plans, in accordance with the Specifications, and as directed by the Engineer.

General

Fiber splicing materials shall conform to Section 808.02 (b) of the Specifications.

Construction

Fiber-optic splicing shall be in accordance with Section 802.03 (b) of the Specifications.

Measurement and Payment

Fiber Splices will be measured in units of each and will be paid for at the contract each price. This price shall include furnishing splicing equipment, splicing fiber optic cable, and testing splices.

Payment will be made under:

Pay Item	**Pay Unit**
Fiber Splice	Each

ORDER NO.: L89
CONTRACT ID. NO.: C000109813C01B

VIRGINIA DEPARTMENT OF TRANSPORTATION
SPECIAL PROVISION FOR
JOINT-USE ORNAMENTAL LIGHTING AND TRAFFIC POLE

April 26, 2017

2 Description

This work shall consist of furnishing, installing, and wiring joint-use ornamental lighting and traffic poles in accordance with these specifications, as shown on the plans, or as directed by the Engineer. The streetlight pole detailed in the STREETLIGHT POLE Special Provision shall be used for mounting luminaire and traffic equipment. The joint-use ornamental lighting and traffic shall be mounted to a VDOT standard LF-1.

3 County Standards

The applicable streetlight pole installation and wiring drawings are:

(a) Joint-Use Ornamental Aluminum Lighting/Traffic Standard

(b) LT-9-1 Breakaway Support System for Light Poles Details per lighting plan sheet 7Q

(c) LT-9-2 Breakaway Support System for Light Poles Details per lighting plan sheet 7Q

Execution

The Contractor shall furnish and install the joint-use ornamental lighting and traffic pole, wiring the pole for fixture and traffic equipment installation, set the pole and back filling, installing a breakaway fuse (10 amp) in the pole base, and connecting all wires necessary.

The Contractor shall also trim all tree branches up to a height of 20 feet and maintain a clear width of 5 feet from all light fixtures.

Measurement and Payment

Joint-use ornamental lighting and traffic pole will be measured in units of each and will be paid for at the contract each price. This price shall include installing the pole, tenon, furnishing and installing wire, breakaway fuse, wire termination, and restoration. Furnishing and installing the luminaire, traffic equipment, and traffic equipment mounting hardware are under separate pay items.

Foundations for the joint-use ornamental lighting and traffic pole will be VDOT Standard LF-1 and will be measured and paid for separately.

Payment will be made under:

Pay Item	Pay Unit
Joint-Use Ornamental Lighting and Traffic Pole	Each

CBAY-VA LLC – EDGECLIFF

AFFIDAVIT OF PHOSPHORUS CREDIT SALE

CBAY-VA LLC, a Virginia limited liability company (the "Company"), hereby certifies the following:

1. Pursuant to that certain **Contract #43961** ("Contract") and **Purchase Order # 50100-0001154543** ("Purchase Order"), between the Company (as Seller) and **The Commonwealth of Virginia, Department of Transportation** ("Purchaser"), the Company, for the benefit of the Purchaser, agrees to sell **0.18** pounds of nonpoint source phosphorus Credits to Purchaser and retire the associated ratio of nonpoint source nitrogen Credits at the credit generating facility in the amount of **1.34** pounds of nitrogen Credits;

2. The Company and the Purchaser will close the transaction contemplated by the Agreement on March 15, 2017 (the "Closing Date") and, as of the date hereof, the Company shall reserve for Purchaser the phosphorus Credits.

WITNESS the following signature:

CBAY-VA LLC,
a Virginia limited liability company

By: _____
Authorized Signatory

Date: March 15, 2017

Sworn to and subscribed before me this 15th day of March, 2017, by T.J. Mascia, Authorized Signatory, on behalf of CBAY-VA LLC, a Virginia limited liability company.

Notary registration number: 7713870
My commission expires: 09/30/2021

State of Virginia
City of: Richmond

CLAIRE WOLANSKI
Notary Public - Reg. # 7713870
Commonwealth of Virginia
My Commission Expires Sep. 30, 2021

Notary Public

Permit #: Pending
Permittee: The Commonwealth of Virginia, Department of Transportation
Phosphorus Credits: 0.18 pounds
Associated Nitrogen Credits: 1.34 pounds
VDOT UPC#: 99580
VDOT Project #: 0029-000-859,C501,B605
District: Arlington

CBAY-VA LLC

COMMONWEALTH of VIRGINIA

DEPARTMENT OF ENVIRONMENTAL QUALITY
Street address: 629 East Main Street, Richmond, Virginia 23219
Mailing address: P.O. Box 1105, Richmond, Virginia 23218
www.deq.virginia.gov

Molly Joseph Ward
Secretary of Natural Resources

David K. Paylor
Director

(804) 698-4000
1-800-592-5482

April 21, 2017

Virginia Dept of Transportation
1401 E Broad St
Richmond, VA 23219
tal.wingate@vdot.virginia.gov

RE: Coverage under the VPDES Construction General Permit (VAR10)
General Permit No. VAR10J585
VDOT-17-055
VDOT - Fairfax - 0029-000-859, C501, B605 - 109813
Transportation
Arlington

Dear Permittee:

DEQ has reviewed your Registration Statement received on April 11, 2017 and determined that the proposed land-disturbing activity is covered under the General VPDES Permit for Discharges of Stormwater from Construction Activities (VAR10). The effective date of your coverage under this general permit is July 1, 2014 or the date of this letter, whichever is later.

A copy of the general permit can be obtained from DEQ's webpage at the following location: http://www.deq.virginia.gov/Portals/0/DEQ/Water/Publications/CGP2014.pdf. The general permit contains the applicable Stormwater Pollution Prevention Plan (SWPPP) requirements and other conditions of coverage. Please print the general permit and read it carefully as you will be responsible for compliance with all permit conditions.

DEQ staff has determined that the proposed land-disturbing activity will discharge to a surface water identified as impaired or for which a TMDL wasteload allocation has been established and approved prior to the term of the general permit for (i) sediment or a sediment-related parameter or (ii) nutrients. Therefore, the following general permit (Part I.B.4) and SWPPP requirements (Part II.A.5) must be implemented for the land-disturbing activity:

- Permanent or temporary soil stabilization shall be applied to denuded areas within seven (7) days after final grade is reached on any portion of the site;
- Nutrients (e.g., fertilizers) shall be applied in accordance with manufacturer's recommendations or an approved nutrient management plan and shall not be applied during rainfall events;
- Inspections shall be conducted at a frequency of (i) at least once every four (4) business days or (ii) at least once every (5) business days and no later than 48 hours following a measurable storm event. In the event that a measurable storm event occurs when there are more than 48 hours between business days, the inspection shall be conducted on the next business day; and
- Representative inspections used by utility line installation, pipeline construction, or other similar linear construction activities shall inspect all outfalls.

The general permit will expire on June 30, 2019. The conditions of the general permit require that you submit a new registration statement at least 90 days prior to that date if you wish to continue coverage under the general permit, unless permission for a later date has been granted by the Board. Permission cannot be granted to submit the registration statement after the expiration date of the general permit.

If you have any questions about this permit, please contact the DEQ Office of Stormwater Management at ConstructionGP@deq.virginia.gov.

Sincerely,

Frederick K. Cunningham

Frederick K. Cunningham, Director
Office of Water Permits