IIBA®
BAConnection
Issue 3
March 2011
What Requiring Minds Want to Know

IIBA
Monthly Newsletter

IN THIS ISSUE:

The Purpose of Business Analysis… ***page 4***

Modeling for Business Analysts – Context Modeling Part 2… ***page 7***

The Importance of the Business Case… ***page 8***

The Value of a Planning Framework for Your Chapter… ***page 11***

Six Benefits of Using Virtual Training to Build Your Business Analysis Skills… ***page 12***

This month: The Purpose of Business Analysis

- Establish the issue or opportunity.
- Understand the problem.
- Facilitate change.

Getting focused

We begin our four part series on building the business case for business analysis with "The Purpose of Business Analysis", an article by Tom Karasmanis, IIBA Chief Architect. Tom provides valuable information on this topic that you can share with your organization, and will demonstrate that a core element of business analysis is the opportunity to facilitate change. Be sure to read the article on page 4.

In keeping with this theme, Kathleen Barret discusses "Why Do Business Analysis" on page 2. She describes the importance of determining your focus, working towards your goals and establishing a benchmark to measure your success.

If you've ever felt that you're too busy to take the time to plan, see the article on page 11 by Neil Bazley, IIBA Deputy Vice President, Chapters. Neil discusses "The Value of a Planning Framework for Your Chapter". Even if you are not involved in your local IIBA® chapter, there are many excellent points in this article that you can apply to your daily job.

IIBA is a virtual organization and these days more and more companies are also working virtually. In the article on page 12, "Six Benefits of Using Virtual Training to Build your Business Analysis Skills" Barbara Carkenord discusses how distance training can help you in this type of work environment.

The Professional Development team has exciting news! *A Guide to the Business Analysis Body of Knowledge®* (*BABOK® Guide*) *v2.0* has been translated into Portuguese by a group of hard-working and dedicated volunteers from the São Paulo Chapter. Learn more about the translation process on page 14.

If you've ever had to communicate with executives in your organization be sure to read this month's Real Words that Work on page 13. Patricia Davies explains the best ways to present information to those at a senior level—you won't want to miss this invaluable information.

Check out the March webinar presentations on page 13, including the new Vendor Showcase webinar launching in April.

Inside Sections:

Letter from the President
IIBA Inside View
Dashboard
Monthly Poll
Business of Business Analysis
Chapter News
Professional Development
Certification Update
Endorsed Education Providers
Events
Monthly Giveaway
The Last Word

Why do business analysis?

You have probably seen the IIBA® tagline "Helping Business Do Business Better". In considering this month's theme, "The Purpose of Business Analysis", I think that at a very high level, this is the reason why business analysis is so important to organizations of all sizes and across all industries.

We have asked Tom Karasmanis, IIBA Chief Architect, to discuss the purpose of business analysis, the first article in our four part series on "Building the Business Case for Business Analysis".

Let's have a virtual show of hands in answer to this question: when you head off to your job each morning, how many of you think about the purpose of your day and what you hope to accomplish by the time you leave work that evening? The truth is, most people rely on habits to get them through the day, working on their never ending to do lists, checking off one item as three more are added to the bottom.

That's why everyone needs a focus. By having a purpose, whether in a business case, thought process or in your daily life, you can determine what you hope to get done by the end of the day. It gives you a basis on which to measure whether or not the day was successful. This is a goal you can set for yourself personally, as well as for your company.

IIBA struggles with purpose as well, even though we are an organization of business analysts. We are often so busy responding to market demands that we sometimes forget to step back and decide what we want to accomplish. It is important to constantly assess our goals and use this as the basis for the actions we need to take to help us achieve our objectives as an organization.

Part of the message a business analyst can bring to their boss—or their boss' boss—is that business analysis helps organizations consciously determine the efforts required to get them where they need to be, and how to use the scarce resources they have to do what needs to be done. As a BA you're providing a means to help them assess where they want to go.

I want to share with you a tool that I'm using now to help me think more about purpose. I recently read a blog by Peter Bregman in the Harvard Business Review that really touched me. Because IIBA is a virtual organization, we don't have natural feedback mechanisms to help us decide if we've been doing the right things during the course of the day. That's why Peter's blog hit home for me.

The process he outlines is, at the beginning of the day before starting work, take a few minutes to think about what a successful day would look like. As an example, I just returned from a week of holidays so for me success is not as much about getting through the hundreds of emails or attending a multitude of meetings, but feeling like I am up to speed about what has been happening with the organization since I've been away.

Once you have determined your measure of success, you can take stock at the end of the day to see if you accomplished your goal. Here is what Bregman proposes:

"Every day before leaving the office, save a few minutes to think about what just happened. Look at your calendar and compare what actually happened — the meetings you attended, the work you got done, the conversations you had, the people with whom you interacted, even the breaks you took — with your plan for what you wanted to have happen. Then ask yourself three sets of questions:

- How did the day go? What success did I experience? What challenges did I endure?
- What did I learn today? About myself? About others? What do I plan to do — differently or the same — tomorrow?
- Who did I interact with? Anyone I need to update? Thank? Ask a question? Share feedback?

This last set of questions is invaluable in terms of maintaining and growing relationships. It takes just a few short minutes to shoot off an email — or three — to share your appreciation for a kindness someone extended, to ask someone a question, or to keep someone in the loop on a project.

If we don't pause to think about it, we are apt to overlook these kinds of communications. And we often do. But in a world where we depend on others to achieve anything in life, they are essential."

This is great advice and an effective way to stay focused on your purpose. Keep in mind your contribution and your goals, and what is important to you and to your company as you assess where you are and what you want to accomplish. Each and every day.

Building Business Capability Conference – Call for Papers

Presentation proposals are now being accepted for the Business Analysis Forum 2011, being held October 30 to November 3, 2011 at the Westin Diplomat Resort and Spa in Fort Lauderdale, Florida, U.S.A. This is the official conference of IIBA.

Do you or your team have a formal presentation to contribute to this event? All selected speakers will be entitled to attend the track symposium free of charge (limit is two speakers for each presentation).

For a list of business analysis presentation topics we will be considering, please visit the Call for Speakers page on the Building Business Capability 2011 website. **Hurry—the deadline for submissions is March 15, 2011**. (Note: business process and business rules topics must be submitted to those forums directly.)

On the road again…

After staying home in Toronto for the past couple of months, I am pleased to be on the road again as meeting IIBA members from around the globe is one of the high points of my job.

In March I am heading to the Heartland Chapter in Omaha, Nebraska, U.S.A. We are still working through the details but I am excited to meet the chapter members and some of the local businesses.

In May, I will be travelling to India, to participate in its first BusinessAnalystWorld conference in Bangalore. I hope to have the opportunity to meet with many of our IIBA members located in India both at the conference as well as through chapter events in a few cities. I will be chatting with Ashish Mehta, Director of Emerging Markets for IIBA, to put together an agenda during my visit.

More about my travels to come...

Kathleen Barret
President and CEO
Read Kathleen's Blog

P.S. The next CEO Screen-side Chat is scheduled for Monday, May 2, 2011 at 8 p.m. to 9 p.m. EDT (UTC/GMT -4 hours). This webinar is for IIBA members only. Register now.

Monthly Dashboard

The Purpose of Business Analysis

By Tom Karasmanis, IIBA Chief Architect

What is the purpose of business analysis? I thought about this question, and like any good business analyst, one of my first thoughts was to make sure I understood the question properly and knew what answer I was looking for!

First let's look at the context. As mentioned in the February 2011 *BA Connection* newsletter, the IIBA theme for 2011 is "Building the Business Case for Business Analysis." Later in the *Letter from the President*, Kathleen Barret introduced the business case for business analysis and described the components of the business case with an executive summary of each section. Each month we will elaborate on each section of the business case. This month, we start by elaborating on the Purpose section.

In the February 2011 *BA Connection* newsletter Julian Sammy describes the components of a business case, and for Purpose he says, "Describes the opportunity and why it is important. Does not describe the solution options. One purpose per business case."

Since the first section is "Purpose", then is the topic of this article really the purpose of business analysis? Let's think about this. When building a business case we are generally attempting to show value; in this case, the value of business analysis to a project or organization. In the Purpose section we are merely establishing the problem or opportunity for which a solution (business analysis) is required. So, yes, the topic of this article is the why (or purpose) of business analysis!

At this point, it is important to mention a subtle but important distinction: there is a difference between the purpose of business analysis and the purpose of a business analyst. At a definitional level, the former is a discipline; the latter is a role. More importantly, the two answers are not necessarily the same. We focus on the purpose of business analysis, although the terms may sometimes be used interchangeably.

You may ask, "Why the preamble?" A couple of reasons: (1) I'd like this article to also be about how to build a business case (or at least some of the thinking that goes into it); and (2) I am hoping I have demonstrated that we should not jump straight to the solution, but spend some time ensuring we understand the problem and what we are trying to accomplish.

You've all seen the various studies and reports identifying some of the reasons for project failure. They are referenced in countless articles so I will not repeat the numbers here, but the message is a common one: that projects continue to fail at unacceptable rates for reasons including:

- Lack of stakeholder input
- Incomplete requirements and specifications
- Changing requirements and specifications
- Unclear scope (scope creep)
- Incorrect solution

These, of course, are all project-level problems addressed by business analysis. We could actually list many more "problems" or "opportunities" like this that business analysis addresses, but in this article I would like to focus on the opportunity at a different level: facilitating change.

The definition provided in *A Guide to the Business Analysis Body of Knowledge (BABOK® Guide) 2.0* (section 1.2) is, "Business analysis is the set of tasks and techniques used to work as a liaison among stakeholders in order to understand the structure, policies, and operations of an organization, and to recommend solutions that enable the organization to achieve its goals."

Kathleen Barret mentions in the February 2011 *BA Connection* newsletter in Letter from the President, "The Purpose or Why of business analysis is actually tied to its definition." She then provides her own definition, "Business analysis is a formalized, disciplined process for identifying, articulating and facilitating a change needed to solve a business problem or address a business opportunity."

This is not really a new definition. Looked at closely, it simply provides a different view; still applying to all levels of an organization, from the enterprise level to the

project level. The emphasis on change perhaps better communicates why business analysis is an increasingly important discipline within the organization. A long time ago, when business change was measured in years and sometimes decades, the need to respond to change was not paramount. Today, organizations face a business environment that is very volatile and constantly undergoing change. Change can come from anywhere: the business environment, competition, legislation, customer demographics, and so on. To survive, organizations must respond to changes quickly and efficiently or risk dire consequences. As happens in nature, in the long run, the race is not to the big or to the strong, but to the swift and agile; i.e. those that most quickly adapt to change increase their odds of survival. The dinosaur did not adapt well. Organizations that do not practice effective business analysis risk going the way of the dinosaur.

In order to effectively respond to change, organizations require the ability to identify and adapt to change. This includes capabilities such as:

- Identifying and analyzing the change (what happened?);
- Identifying the real problem or opportunity (so what's the real problem?);
- Discovering and documenting the current state (where are we now?);
- Identifying the desired state (where do we want to be?);
- Developing one or more solutions (what are our options?);
- Selecting and validating the best solution (what is the best option for us now?); and
- Identifying the gaps and road map (how do we get there?).

While the list above defines the activities needed, it does not speak to quality or process. We would, of course, like to be able to execute the above activities in a manner that is:

- Efficient;
- Repeatable; and
- Meets set quality standards.

There are various ways to view the purpose of business analysis, but a core element of these views is that *business analysis is about facilitating change*. So the opportunity being addressed in *Building the Business Case for Business Analysis* is the *opportunity to facilitate change within an organization*. This change may be at the enterprise level, at the project level, or somewhere in between. It may involve IT (building / changing systems) or not (e.g. business processes). This view is particularly important in today's volatile business environment where constant change is the norm. Often the requirements for a project change before the project is completed. In order for a business to survive today, it needs to be able to effectively adapt to change. This is precisely the opportunity business analysis addresses.

Many organizations today are still either not convinced that business analysis is necessary or do not clearly understand what it is and how it fits into the organization; hence the development of this business case for business analysis. Subsequent sections of the business case in the next few issues of this newsletter will address the benefits, risks, and costs associated with business analysis as a solution as well as the consequences of not doing business analysis.

To post a comment, visit the Community Network.

Strength in numbers: IIBA working with other organizations

By Kathleen Barret, IIBA President and CEO

"No man is an island"[1] and neither is a professional association for business analysts. Throughout its seven years of existence, International Institute of Business Analysis (IIBA) has reached out to other organizations which either support the BA profession directly or benefit from the development of standards in the practice of business analysis. We are all working to a common cause and will all benefit from the growing awareness of the importance of the profession. These relationships are "works in progress" and will continue to evolve and expand over time. In the meantime, here is an update of our current relationships.

To post a comment, visit the Community Network.

Organization	Who they are	What we are doing with them
PMI	Project Management Institute, a membership association for the project management profession (>500,000 members)	Developed a white paper on the alignment of the PM and BA bodies of knowledge (BOK) that is undergoing final review. Further collaboration on roles and BOKs planned.
BCS ISEB	Information Systems Examinations Board, a UK-based examination body supporting development and recognition of IT professionals. Offers a ISEB Professional in Business Analysis certification based on completion of specific curriculum	Determining how to support (i.e., not compete) and align the activities of both organizations. Initially focused on recognizing ISEB level qualifications as relevant to professional development requirements for IIBA® certifications.
EABA	European Association of Business Analysis (EABA) a consortium of German speaking education and training organizations.	Partner to deliver a German version of the *BABOK® Guide* and certification in Germany, Austria and Switzerland.
Business Rules Solutions	Leader in the advancement of the business rules approach. Partner in the Building Business Capability Conference http://www.brsolutions.com/	Discussing developing a business rules extension to the *BABOK® Guide* and associated certification.
Process Knowledge Consortium	Consortium of organizations focused on developing an open source, process body of knowledge. IIBA is a founding member along with OMG, BPTrends, Queensland University of Technology, industry experts. http://www.processknowledge.org/	Founding partner in the initiative. Initiated call for action. Seeking sponsorship.
IREB	German-based standards body. Offers certification (Certified Professional for Requirements Engineering) based on its 3 level requirements engineering for software products syllabi. http://www.certified-re.de/en/	Determining how to support (i.e., not compete) and align the activities of both organizations.

[1]"No man is an island, entire of itself; every man is a piece of the continent, a part of the main; if a clod be washed away by the sea, Europe is the less, as well as if a promontory were, as well as if a manor of thy friend's or of thine own were; any man's death diminishes me, because I am involved in mankind, and therefore never send to know for whom the bell tolls; it tolls for thee."

– John Donne, 1624, Meditation 17, Devotions upon Emergent Occasions

Modeling for Business Analysts

Context Modeling, Part 2: Putting Detail into the Context Model

By Meilir Page-Jones, Consulting Business Analyst, Wayland Systems Inc.

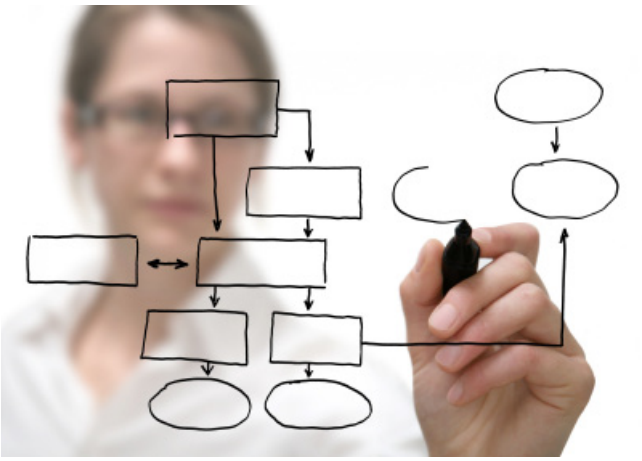

This month's article addresses two questions I've often heard from business analysts:

Q: What *kind* of detail should our context diagram show?

Q: How *much* detail should it show?

The answer to the first question is that there are two kinds of detail typically shown on the context diagram, depending on the kind of requirement you need to show. The channel *context diagram* shows how each actor will be connected to the system. The *data-flow context* diagram shows what information will pass to and from each actor.

Both kinds of context diagrams capture vital requirements for the new system. In this month's column we'll first look at each kind of context diagram and then answer the question about level of detail.

The channel context diagram

Channel is the term for the way in which an actor is connected to a system. Examples of channels for human actors include: Web access, client/server connection, e-mail and so on. For actors that are other systems we might have: MOM (message-oriented middleware), EDI (electronic data interchange), CORBA (common object-request-broker architecture), API (application-programming interface) or anything else from the IT acronym soup.

Some actors may be offered a choice of several channels. For example, a customer may be offered Web access, telephone voice recognition or service-rep assistance. Some channels may be offered for only a few interactions; for example, the telephone voice-recognition channel may be offered only for status inquiries.

Fig. 1 shows an example of a channel context diagram. Notice that there are three channels by which a customer may access the system: voice-recognition, e-mail and the Web. However, as noted on the diagram, voice is used for only a few interactions and e-mail is used only to send acknowledgements.

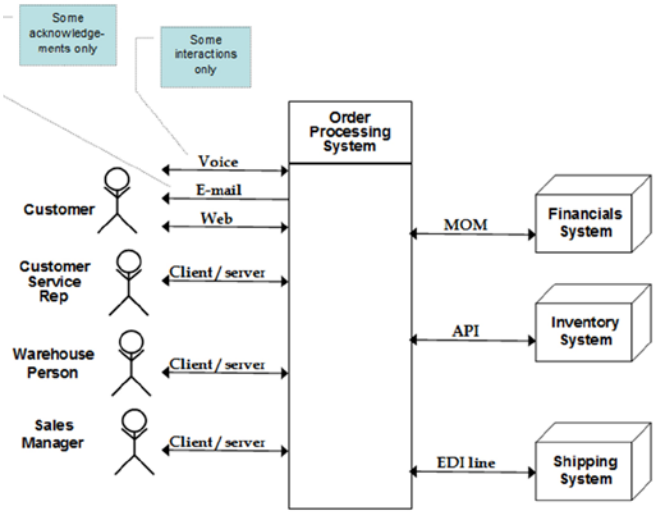

Fig. 1: A channel context diagram for the Order Processing System

Q: As a business analyst, how do I know that the interface to the Inventory System is via an API channel?

The answer is simple: Go ask the Inventory team. As a business analyst, you're not expected to be a technical expert. But on the other hand, you must know that the requirements you're capturing are in fact feasible. Find out from them the channel(s) of access that they offer.

If there's no interface to the Inventory System, then you're sunk—unless building an interface gets added to the project plan. On the other hand, if there are two possible channels via which you can access the Inventory System, you can put them both on the Channel Context Diagram for now (perhaps noted with a "??") and pick one later, knowing that you have a feasible connection.

The data-flow context diagram

Fig. 2 illustrates another kind of context diagram: one that shows flows of data. This diagram has remained important to business analysis over several decades.

In Fig. 2, each line between the actor and the system represents a flow of data. The arrowhead shows the

predominant direction of the flow. For example, *Order info* goes primarily from the Customer to the system. In reality, there will be an acknowledgement or confirmation that goes back to the customer but conventionally this is treated as incidental and not given its own arrowhead. (If you don't like this convention, it wouldn't hurt to use a double-ended arrow.)

On the other hand, the *Physical inventory request* carries information in both directions and so gets a double-ended arrow. (For instance, the Order processing system asks the Inventory System: "Where can I find 12 magenta toner cartridges #TC-2735M?" The Inventory System replies with the physical location(s) of the items, which will then be used for warehouse picking.)

Finally, notice that routine reports (such as *Sales reports*) have the flow of information solely towards the Sales Manager actor. I'm assuming that little or no information is required from the actor to generate these regular reports…

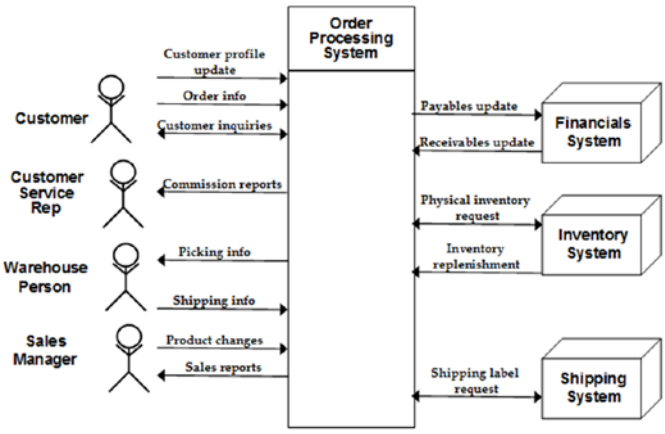

Fig. 2: A data-flow context diagram for the Order Processing System

To read the entire article or post a comment, visit the Community Network.

The Importance of the Business Case: A Vehicle for Strategy Execution

By Kathleen B. (Kitty) Hass, PMP, Senior Practice Consultant

It's About Innovation

Those organizations that are first to acquire and master Enterprise Business Analysis and elevate Enterprise BAs to a critical leadership role will more effectively react to and pre-empt changes in the marketplace, flow value through the business to their customers, thus achieving competitive advantage. In today's global economy, the conventional wisdom is innovation is the key to survival. It is through projects that companies innovate to create value for their customers and wealth for their organizations. The effectiveness of an organization's ability to innovate through programs and supporting projects depends on its ability to *define and execute strategy* by:

- Understanding their market and the competitive environment
- Establishing a future vision and setting strategic goals
- Converting strategies to valuable innovation projects, and then
- Executing flawlessly to be first to market

So, how well do fortune 500 companies execute strategy? According to David Norton of Harvard University:

- Less than 10 percent of successfully formulated strategies are effectively executed
- Eighty-five percent of executives spend less than one hour per month on strategy
- Ninety-five percent of employees do not understand their organization's strategy

- Sixty percent of organizations do not link strategies to the budget
- Seventy percent of organizations do not link strategies to incentives

The root cause behind these statistics is this: executives do not have a framework for strategy execution. What would such a framework look like? It would look something like this four step portfolio management process:

1. Critical information is provided to the executive team through strategy and goal decomposition, enterprise analysis, research, competitive analysis, benchmark studies, analysis of business problems and opportunities, and new idea generation documented in the **business case**.
2. The **business case** serves as a new project proposal during strategy, project selection, and prioritization sessions, when project investment decisions are made. Therefore, investment decisions are only as good as the **business case**.
3. The strategy-focused program and project teams execute against goals, objectives, and business benefits described in the **business case**. For that reason, the **business case** needs to be of the caliber so that it will guide the subsequent work.
4. The project, program and portfolio managers continually validate information kept current in the **business case** to validate that the investment is still warranted and the business benefits will be achieved…driving business results.

How do we Develop our Business Cases?

> **Controlling costs is still a major business pressure. But cost cutting alone doesn't foster growth, energize employees, or attract new customers. Investments do—if they're well-conceived, solid, and deliver results. Brilliant business cases can facilitate that. —Gartner EXP Premier, January 2005**

Why is it that contemporary corporations and public entities continue to invest heavily in information technology (IT) projects without confirming their strategy is correct? It is the gap in *enterprise analysis practices* that provide the framework to execute a business strategy. The business case is the *critical component of strategy execution*. Without a business case, a disturbing percentage of programs and supporting projects are not designed to execute strategies.

The business case is the linchpin for making sound investment decisions—the link between strategy and execution. The business case is used to describe a new initiative that is designed to convert strategies into valuable innovative projects. So how good are our business cases? Unfortunately, in the fast-paced world of business the business case is often created as quickly as possible (if it is created at all); is simply used to secure the resourcing and funding; and is therefore, not a result of serious enterprise analysis. Once funding for a project is secured, it is often discarded, never to be looked at again. Consequently, only enough effort, expertise, and analysis to get the funding are expended.

Who Needs a Business Case?

There is value to a business case for virtually all stakeholders, including business analysts, project managers, business units, and the executive team.

Benefits of a Business Case to the BA

- The BA is elevated to a strategic role
- The BA becomes a key player in "strategy execution"
- The BA role on the project focuses the team on business priorities
- The rationale the BA uses for decisions is clearly documented in terms of business value

Benefits of a Business Case to the PM

- The PM has clear business benefit information from which to make decisions
- The PM is pulled from a tactical solution developer to a strategic implementer of change
- The PM uses the BA as a strong advocate for the business, understanding their respective accountabilities
  - PM: deliver the solution on time, on budget, with full scope of features and functions
  - BA: meet business needs

Benefits of a Business Case to the Executive Team

- Executives are confident they are investing in the most valuable projects
- Executives make decisions about projects based on business value all through the project to "protect their investment"
- Executives finally know the expected value of their portfolio, and the actual value of the benefits that were realized through newly deployed solutions

Benefits of a Business Case to the Business

- Project ROI is clear
- Business objectives are met
- Business strategy is achieved
- Competitive position is salvaged or greatly improved

The Burden of Analysis

In the 21st century it is even more important for an organization's leadership team to establish a future vision and set strategic goals to innovate and remain competitive. But the leadership team cannot execute strategy alone. It is through a robust portfolio of projects that strategies are converted to valuable programs and projects. What keeps organizations from successfully managing their project portfolio? "Companies often lack the necessary management information and the energy required to address *the burden of analysis." (Andy Mais PMNetwork, Decision Time. March 2006)*…

To read the entire article or post a comment, visit the Community Network.

Chapter Spotlight – Latvia

By Valerija Savina, IIBA Latvia Chapter Board Member

It was a bright spring day in April 2010 when a group of business analysts got together for the IIBA® Latvia Chapter kick-off meeting.

A few months later, on a crisp autumn evening in October 2010, we received the great news from Tracy Cook, IIBA Chapter Development, Special Events and Advertising Manager, that we had received chartered chapter status.

At the time of the start-up meeting our chapter had 15 members, and we were pleased to discover there was much interest from potential members. Today, we have 19 chapter members, and as interest continues to grow we expect to welcome more members during the next quarter.

When the idea for the IIBA Latvia Chapter was born, our biggest concern was attracting business analysis professionals. We wondered if they would understand the value of the organization, and would want to participate in establishing and developing the chapter.

To deal with this challenge we prepared an hour long motivational presentation. We brought together small groups of business analysts and shared our passion for the BA profession, discussed the issues around business analysis here in Latvia, and introduced the great new possibilities for the future.

Although we have many good ideas to develop and lots of plans for the chapter, our volunteers only have two arms and 24 hours a day. It can be difficult to get involved in the chapter after a long day at work as everyone needs some time to relax. That's why our main issues include:

- How to involve volunteers and how to motivate them
- How to develop all the great ideas when there is a lack of time

We address these issues by sharing our passion, performing all chapter activities at a high level, and promoting our chapter as well as chapter members.

Since we first had the idea of establishing a chapter in Latvia we have learned a great deal. We gained invaluable experience on how to motivate people, communication, spreading the word, organizing events, writing materials and much more. A lot depends on the initiative and enthusiasm of the individuals and we have found:

1. People's interest in this kind of activity is bigger than expected.
2. It takes a lot of time and effort.
3. Regular activities are needed to keep people motivated.

We are pleased to have several big successes:

- Attracting enough members in a short time period to charter the chapter.
- Collaborating with the Latvia IT cluster for help and support.
- Organizing the first BA Conference in Riga, Latvia in 2010.
- Establishing business analysis dinners and regular monthly seminars.
- Organizing an IT Olympiad for students in Riga, Latvia in 2010.

The most important thing we would tell a new chapter is go ahead! You are doing the right thing!

But if you're not sure that you have people who are willing to contribute their time and energy to the formation of the chapter, you may want to reconsider

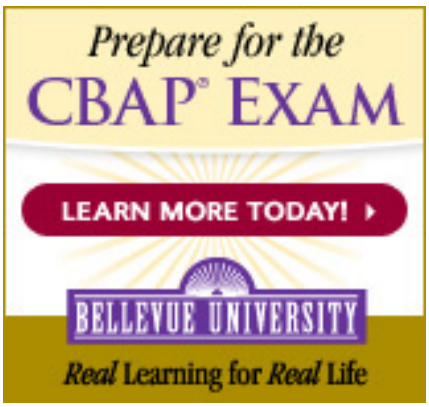

starting a new chapter until you have volunteers who are committed to the process.

Our wish for our chapter and IIBA is for the organization to become a well-known and recognized organization for BA professionals. IIBA should work as a mediator between companies and universities, employers and workers. We would like to see the organization become a place where business analysts and those who are interested in business analysis have a chance to develop, meet like-minded people and spend quality time.

To read the entire article or post a comment, visit the Community Network.

The Value of a Planning Framework for Your Chapter

By Neil Bazley, IIBA Deputy Vice President, Chapters

Do you feel like you are too busy reacting and you don't have time to plan? It's a common sentiment from chapter leadership, and one that could very well be stemming from our nature as business analysts. Painting with a broad brush, we tend to be doers not managers, and we often think more about how to get things done rather than "Why are we doing these things?" (My apologies to those strategic BAs out there!) Changing to a goals-based approach can completely change the way your board operates and remove some of that helplessness that can be attached to just reacting to your circumstances.

"He who fails to plan, plans to fail." – Proverb

In my role as Deputy Vice President of Chapters for IIBA®, I often hear that chapters think planning is a great practice in theory but they are too busy getting stuff done, or they have too many fires to put out to spend the time on planning. I've even heard from some chapter board members that they don't see the value in planning since things change so often.

…And you know what? They're all valid objections to spending what can be considerable time and resources in creating a plan for your chapter. However, the value of the process can far exceed the cost of planning. I'm hoping over the course of this article that I can show some of the benefits and a way to do planning that makes sense for a chapter so it doesn't just feel like an exercise that needs to be completed as part of a checklist.

As a matter of fact, at a board level, creating a plan could just be the single most important thing that you do to create a strong and thriving chapter leadership. Changing the mindset to that of proactive management creates empowerment for the team and raises the energy and excitement level for everyone involved. With an increased sense of purpose and an ownership of their actions, it's amazing to see how much everyone will pull together towards the common goals.

A strategic plan for a chapter doesn't have to be an expensive, time intensive endeavor. The first plan that we did for our chapter was a series of two PowerPoint slides from each Vice President; one outlining what they wanted to accomplish for the year and the second listing the actions they would take and the resources and budget they would need to make it happen. After a half day session in presenting their plans to each other I was actually told by one board member that the real value to them from the experience was the process of actively thinking about what they wanted to accomplish as opposed to just having something written down somewhere.

"A good plan today is better than a perfect plan tomorrow." – Proverb

One of the major takeaways from my experience is that your plan doesn't have to be perfect, and there's a point at which you can start to get into planning paralysis. As a small or start-up chapter, too much planning starts to become detrimental. Create something that focuses your chapter leadership and provides a framework for your activities…

To read the entire article or post a comment, visit the Community Network.

Six Benefits of Using Virtual Training to Build your Business Analysis Skills

By Barbara A. Carkenord, CBAP, PMP®, Director of Business Analysis Practice, RMC Project Management

Every training professional will tell you that face-to-face, instructor-led training is the most effective way to build your skills, and many educational studies have proven this fact. Business analysis training is no different. However, given time and money constraints, which are particularly prevalent in this economy, virtual training is a great option. In addition to the time and cost savings, this mode of learning can provide some unique benefits over instructor-led training, especially for business analysis skills. The following are six of the top benefits of virtual training.

1. Provides an opportunity to practice virtual elicitation

One of the biggest advantages of virtual business analysis training is that it provides an opportunity to practice communicating virtually. Most BAs work virtually with at least one of their stakeholders. The more practice you have using virtual tools and communicating across distances, the easier and more comfortable it becomes. High-quality virtual training sessions include interactions with the instructor and other students, giving each student an opportunity to elicit (ask questions) and actively listen (gather information) virtually. Because the instructor and the students are often people with whom you have no prior relationship, you get a chance to practice interacting with new stakeholders, using techniques like building rapport, carefully formulating questions and answers when you don't know the other person's background, and communicating more formally and directly, all in a virtual environment.

2. Creates an environment where you can ask questions with less risk

The semi-anonymous nature of virtual training allows less experienced BAs to participate when they would have otherwise remained silent because of a fear of embarrassment. Instructors always say "There is no such thing as a dumb question," but every student has been in a situation where they are hesitant to ask a question because they are intimidated by the group's physical presence. Even though you may "meet" other students in a virtual classroom, you rarely get a visual. As a result, you often don't remember the other participants after the session is over. This can give students a sense of freedom to ask questions they might not be comfortable asking in person.

3. Allows you to get focused training on particular skills as you need it

Educational and neurological studies show the human brain learns by connecting new information to existing concepts, knowledge, and experience. Studies also show that repetition and practice reinforce the brain connection and solidify the learned skills. Virtual training classes are often designed in short sessions and are focused on specific topics. This approach of focusing on one particular aspect of business analysis for briefer periods of time allows you to make one new "brain connection" for the new skill. And when you attend sessions on a skill area as you need the training, the likelihood increases that you will immediately reinforce what you have learned by practically applying the skill…

To read the entire article or post a comment, visit the Community Network.

MASTER OF SCIENCE IN
PREDICTIVE ANALYTICS
NORTHWESTERN UNIVERSITY
SCHOOL OF CONTINUING STUDIES
STUDY ONLINE

Real Words that Work

By Patricia Davies, President, Patricia Davies Communications

Communicating up got you down?

Most Business Analysts write documents that travel in one of two directions: up to the management and executive level, or sideways to their project peers. BAs can get bogged down in the "up" part, believing those on the higher rungs of the corporate ladder need elaborately written, complicated documents that contain all possible details about the topic. And they would be so wrong.

Executives can get pretty worked up talking about the extra burden this type of writing puts on their time and their ability to make sound and relevant decisions.

> **"I can't tell you the number of times I struggle through documents just to get to the part that says what the issue is in clear English. I'll get paragraphs that contain more acronyms I don't understand than regular, straightforward words."**
> **(Sr. VP, Application Development)**

> **"I frequently have to brief my boss and I know way less about the issue than the person who is sending me the information. My boss knows less about it than me. The further up the line, the less the decision-maker knows about your topic."**
> **(VP, major financial institution).**

Here are some ways you can meet the needs of management for clear and concise information.

- Keep it short: Respect their time and keep your document as short as possible. If you are tempted to add just a few more details, remember this guideline: The more words you use, the greater the chance your message will be lost.
- Keep it simple: When possible, avoid acronyms or terminology specific to your project. If you use acronyms, spell them out on the first reference.
- Keep it relevant: Decision-makers need the high-level summary, not pages of data.
- Aim to express, not impress: Executives deserve clear language as much as anyone else you deal with. No one benefits from inflated words that feel good to the writer but communicate nothing to the reader.
- Give them a roadmap: Use sub-headings to introduce each section, such as "progress to date" or "recommendations" so decision-makers can easily zero in on pertinent information.

To post a comment, visit the Community Network.

IIBA Webinar Series

Effective Communication Webinar Series

Tuesday, March 1, 2011 at 12 p.m. to 1 p.m. EST (UTC/GMT -5 hours)

This webinar is for IIBA members only. Register now.

Being A BA Series - Your Career

Tuesday, March 8, 2011 at 12 p.m. to 1 p.m. EST (UTC/GMT -5 hours)

This webinar is for IIBA members only. Register now.

Spotlight Webinar: The BA and PM Partnership

Wednesday, March 9, 2011 at 12 p.m. to 1 p.m. EST (UTC/GMT -5 hours)

Join us for this spotlight webinar delivered by Elizabeth Larson from Watermark Learning. As the importance of both business analysis and project management increases, how can the two best work together? Project managers (PMs) and business analysts (BAs) need to build strong working relationships based on respect and understanding of each other's work. A strong partnership between these two roles can significantly increase the likelihood of project success.

Learning Objectives:

- Briefly describe the key areas of work which are described in both the *PMBOK® Guide*, Fourth Edition and the *BABOK® Guide Version 2.0*
- Highlight potential areas of conflict between the BA and PM
- Discuss effective work strategies for BAs to build a strong partnership with the PM

This webinar is open to all. Register now.

ABC: Authors, Books and Conversations

***Software Requirements*, Second Edition, Karl Wiegers**

Monday, March 14, 2011 at 12 p.m. to 1 p.m. EDT (UTC/GMT -4 hours)

This month our speaker and author Karl Wiegers will be discussing his book *Software Requirements*. *Software Requirements* does not describe a specific methodology for developing requirements. Instead, it presents a tool kit of several dozen "good practices that many organizations have found to be effective when thoughtfully applied". These practices address all five subdomains of requirements engineering: elicitation, analysis, specification, validation, and management. The book includes many examples and stories drawn from actual projects. It describes comprehensive templates that can be used to store business requirements, user requirements, and both functional and nonfunctional software requirements. These templates and many other work aids for business analysts can be downloaded from www.processimpact.com.

This webinar is open to IIBA members only. Register now.

Being A BA Series - Technical Excellence

Tuesday, March 29, 2011 at 12 p.m. to 1 p.m. EDT (UTC/GMT -4 hours)

This webinar is open to IIBA members only. Register now.

New! Vendor Showcase Webinar Starting in April!

IIBA® is pleased to announce the launch of a new webinar series, the Vendor Showcase.

The subject of each webinar will be a specific task or technique (or a group of related tasks/techniques) from *A Guide to the Business Analysis Body of Knowledge® (BABOK ® Guide)*. The BA community will have the opportunity to participate in these webinars and see how available tools can meet your needs to perform these tasks(s)/technique(s) from the *BABOK® Guide*.

For each webinar, we will invite three BA tool vendors to participate. Each tool vendor will have time to present how their product aligns with the specific task(s)/technique(s) of the *BABOK® Guide*.

This webinar series is open to the entire BA community, and we strongly encourage you to invite senior leaders and key decision makers in your organization to attend. These webinars will also be archived and posted to our website for further viewing.

For more information please visit the Vendor Showcase page on the IIBA website.

BABOK® Guide v2.0 now in Portuguese

By Fabrício Laguna, CBAP, PMP, Vice President of IIBA São Paulo Chapter, PM for the translation initiative

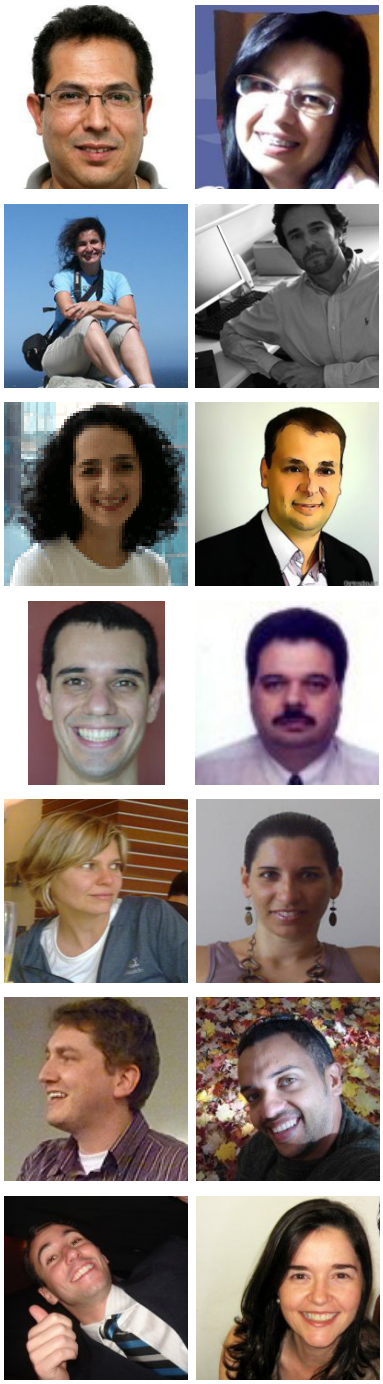

I received an email from Kevin Brennan, IIBA Vice President, Professional Development and Communities, asking me to write an article describing the translation process of *A Guide to the Business Analysis Body of Knowledge® (BABOK® Guide)* v2.0 into Portuguese, and to send the article along with a photo of the team that participated in the project.

The article should not be difficult, I thought, but the photo... most of the team that worked on this project was spread throughout Brazil, a country with continental dimensions, and others even further away in other continents. Suddenly I realized something really interesting about this project: all the work had been done without a single face-to-face meeting between the team members. Daily we discussed the translation of terms of the most-

used expressions in the Brazilian market in order not to lose the original meaning of each concept presented by the BABOK. Views were presented, ideas evaluated, and when no consensus was possible, we voted. All of this interaction occurred through virtual collaboration tools and the excellent results that are now available for downloading in PDF format from the International Institute of Business Analysis (IIBA) website will also soon be available for purchase in printed format to the entire community of Portuguese speakers.

The really hard work that required most of our time was reviewing. For this step, IIBA demanded that the team of reviewers be formed with experienced business analysts from several different backgrounds. We sent out two calls for volunteers and only formed the team with the desired profile in April 2010.

Our project was officially completed in January 2011, and I am sure that our experience may help future initiatives for the *BABOK® Guide* translation into other languages or for other subjects. Below I share some of the methodology we developed for this project, especially the collaboration tools and stages of the review structure…

To read the entire article or post a comment, visit the Community Network.

Certification Program Update

By Suzanne Bertschi, Certification Product Manager

CCBA™ Certification of Competency in Business Analysis

CCBA™ Update

- Over 1000 applications have been started
- 67 applications submitted
- 59 applications approved
- 45 countries/locations represented
- Free one year IIBA® membership to the first 50 exam candidates who sit for the exam by end of day June 30, 2011.
- More information – review the CCBA™ Handbook.
- To start an application, visit CCBA™ Online Application.
- Exam locations – visit CBT Locations.

Recertification – You could lose your CBAP® status

If you are a Certified Business Analysis Professional™ (CBAP®) recipient and you do not recertify, there are consequences:

- Your designation will be suspended and eventually, terminated.
- You can no longer use "CBAP" as part of your title, or use the CBAP® logo on your business card or email signature.
- Your name will be removed from the official CBAP® recipient listing on the IIBA website.

To avoid these consequences, follow these instructions:

1. Check your recertification date on your wallet card.
2. Review the CBAP® Recertification Handbook. It is now much easier to earn Continuing Development Units (CDUs).
3. Click on the CBAP® Recertification package under Quick Links on the CBAP Designation web page.
4. Complete the recertification application form, CDU reporting form and Code of Conduct form.
5. Mail your completed recertification package with payment to our address under Contact Us by your recertification date.

As part of the select group of CBAP® recipients, you have dedicated a great deal of time and effort to your business analysis career. This includes demonstrating the CBAP® requirements, completing the application process, and finally, passing the CBAP® exam. **Don't let it all go to waste—act now!**

If you have questions, you can email certification@theiiba.org.

Calling all CBAP® recipients!

IIBA would like to profile you in future newsletters. Profiling your CBAP® status will add further credibility and recognition of your membership in this elite group of business analysis professionals amongst your peers, management and clients.

Why would IIBA like to profile you? Your profile offers IIBA the opportunity to recognize you and your accomplishments. Now that our newsletter is not just for

members anymore, profiling a CBAP® recipient also gives IIBA the opportunity to continue promoting the value of our certification.

As part of your profile, we welcome information on how you have used your certification, how the certification has helped you, the value your company holds in your certification, etc.

If you are interested in being profiled in a future newsletter, please send an email to certification@theiiba.org.

CBAP® Update

As of January 31, 2011, we have 1,195 CBAP® recipients. For a listing of CBAP® recipients, visit CBAP® Listing. CBAP® packages including the wallet card and certificate are mailed out on a quarterly basis.

For more information on the Certification program, visit the IIBA website. For Certification questions not addressed on the website, email certification@theiiba.org.

Benefits of CBAP® Certification

By Vicki M. James, PMP, CBAP, Senior Project Manager / Business Analyst

I had performed business analysis for a number of years before moving into project management and achieving my Project Management Professional (PMP) in 2005. It wasn't until after I made this move that I learned of IIBA®, the *BABOK® Guide*, and the Certified Business Analysis Professional™ (CBAP®) designation.

I was on a different career path and hadn't originally planned on pursuing study and certification. The organization I was working with in 2010 was going through process re-engineering on their requirements processes. Unfortunately, the people leading the change did not avail themselves to understanding the roles, responsibilities, and professions as outlined by IIBA. They were busy recreating the wheel. This was frustrating to watch from the sidelines especially as a peer and I had provided information on both IIBA and my previous experience within the organization. Watching the effort for process improvement without the use of previous best practices was hard. The information and tools available through IIBA would have helped tremendously toward improvements in processes for business analysis and requirements to be more effective and valuable. Knowing the value that PMI had brought to our local project management collective, I felt responsible for bringing the same discipline to business analysis. Getting the certification would give me broader knowledge of business analysis which would help me to educate others as well as make me more marketable as a consultant.

I have only been certified for one month, but I already see that the credential piques the curiosity of others in the certification. I can make a lot of headway in promoting the certification just by answering "What is CBAP®?" I am the first in my local community to achieve the certification and am working with a few other individuals to help spread the word of the advantages of IIBA and what their certification has to offer. I have been asked numerous times about the CBAP® certification process and test and have volunteered to assist with a local study group. We are working on a business analysis event where we will ensure that the audience gets a good overview about IIBA and the profession of business analysis. I look forward to helping spread the word of the knowledge areas and processes, and especially competencies, tools and techniques. I believe that just making this information visible will help others see the benefit of the body of knowledge and CBAP® certification and begin their own exploration into the best practices available.

Everyone has different study habits and learning styles. Pick the one that works best for you. There are a number of self-study groups available through your local IIBA chapter as well as eTraining available online as an alternative to an in-person preparation course.

What you need to know is:

- Knowledge areas and processes – What is each process and what benefit does it bring to your projects?
- Underlying competencies
- Techniques and tools – Have a high level understanding of each tool and technique listed. If shown a picture, you should be able to identify the tool or technique and state what it is useful for. You will need to be able to recall each tool and technique but not necessarily recite it.
- Practice taking tests that can have multiple correct answers, but look for the BEST answer. Having multiple sample tests available was the most valuable aspect of the eTraining I took through ESI.
- Have faith in yourself. There are a lot of technical terms, but aside, common sense prevails.

To post a comment, visit the Community Network.

Endorsed Education Provider (EEP™) Update

New EEP vendors

IIBA® is pleased to present several new EEP vendors listed below:

Adaptive Processes

www.AdaptiveProcesses.com

Bangalore, Karnataka India

Certified Business Analyst

Crosswind Learning

www.crosswindpm.com

Texas, U.S.A.

CBAP® Exam Prep Bootcamp

CCBA™ Exam Prep Bootcamp

CSC Deutschland Akademie

www.cscakademie.com

Hessen, Germany

Business Analyst Education Programme

Mark your Calendars!

IIBA Building Business Capability (BBC) Conference October 30 - November 3, 2011 Fort Lauderdale, Florida, U.S.A.

Once more BBC is offering three co-located conferences for the price of one (plus some new tracks). Whether you are interested in Business Process, Business Rules or Business Analysis, or simply want to make your organization more agile, responsive and effective, don't miss this opportunity! See the whole picture and share experiences with like-minded practitioners and managers. For more information please visit BBC 2011.

Super Early Bird prices are in effect until Feb 28, 2011 - save up to 45%!

If you missed the 2010 conference and want to find out more please visit us at BBC 2010.

Newly Endorsed Courses

IIBA® is pleased to present these newly endorsed courses from our existing EEP vendors listed below:

AFNAM Consulting

www.afnam.com

Riaydh, Saudi Arabia

Business Analysis Fundamentals

Cardinal Solutions Group

www.cardinalsolutions.com

Cincinnati, Ohio, United States

BA Foundations – Introductory Level

Crescent Hostira Technologies

www.crescenthostiratechnologies.com

Alawarpet, Chennai, India

CCBA® Exam Prep

Graduate School

www.graduateschool.edu

Washington, D.C., United States

Business Analysis Planning Workshop

KB Management

www.kbmanagement.biz

Hachioji, Tokyo, Japan

Introduction to Business Analysis Methodology

McMaster University, Centre for Continuing Education

www.mcmaster.ca

Hamilton, Ontario, Canada

Business Analysis: Requirements Development, Documentation, and Management

Noble Inc.

www.nobleinc.ca

Toronto, Ontario, Canada

Strategic Enterprise Analysis for the BA

PROJECTWORLD BUSINESS ANALYST WORLD

www.businessanalystworld.com

ProjectWorld*BusinessAnalystWorld Canada

www.projectworldcanada.com

Toronto
May 6-9, 2011
Toronto Metro Convention Center

Vancouver
October 11-14, 2011
Pan Pacific Vancouver

PROJECT SUMMIT BUSINESS ANALYST WORLD

www.businessanalystworld.com

Philadelphia
April 4-7, 2011
ACE Conference Center

Minneapolis
June 13-16, 2011
Marriot Minneapolis West

Boston
October 24-27, 2011
Boston Marriot Burlington Hotel

Chicago
November 13-17, 2011
Hyatt Regency O'Hare

Las Vegas
November 18-19, 2011
Caesars Palace

BUSINESS ANALYST WORLD SYMPOSIUM SERIES

www.businessanalystworld.com

Calgary
April 26-27, 2011
BMO Center, Calgary Roundup Center

India
May 26-27, 2011
ITC Royal Gardenia, Bangalore

Sydney
July 25-28, 2011

Melbourne
August 2-5,2011

Atlantic Canada
November 21-22, 2011

Ottawa
November 29-30, 2011
Hampton Inn

IIBA – BBC Conference
Fort Lauderdale, Florida Oct 30 – Nov 3, 2011
www.buildingbusinesscapability.com/email/012511/

Play to Win!

In the February newsletter, we asked "What is the number two New Year's resolution for IIBA?"

The correct response is: **"Think about our customers in all that we do."**

Our winner is Samuel Arabome with SW Global Limited, Nigeria.

Now here's your chance:

"According to the February newsletter, how many years did Rick Clare work at Oracle as a developer?"

Please email your responses to IIBANewsletter@theiiba.org by March 11th, 2011.

The winner will receive a CBAP Exam Prep Course from **BAMentor**.

Our Instructor-led CBAP® Exam Prep course takes you on a complete journey from starting the application process to scheduling a time to take the CBAP® Exam. During your journey, you will receive guidance for goal setting, follow a structured learning approach, be immersed in the knowledge of the *BABOK® Guide*, learn the best practices of business analysis, use tools to determine your readiness for CBAP® certification, and gain the confidence you need to pass the CBAP® exam!

BAMentor is a small group of seasoned Business Analysts and IT professionals who are dedicated to the business analysis profession. We provide professional development and training through educational courses, study aids, as well as other tools and resources.

Policies

IIBA® will only accept advertisements from organizations directly related to the IIBA mission of providing information valuable to our readers. IIBA reserves the right to reject advertisers who offer products or services that directly compete with those offered by IIBA. All ad copy and design must be approved by the IIBA marketing department.

Content for ads should keep in mind the international nature of IIBA. However, ads specific to a certain geographical area may be approved on a case by case basis. Such advertisers should also consider individual chapter newsletters.

Interested parties should email IIBANewsletter@theiiba.org. Be sure to include the size of ad you would like to place, a short company description and the newsletter issue in which you would like to advertise.

For information about other IIBA Advertising Opportunities including Website Advertising, Website Events Calendar, Monthly Webinar Series and Monthly Quick Tips for Better Business Analysis Bulletin, please visit Advertising on our website.

Questions or Comments?

If you would like to contact the editorial staff regarding future topics or suggestions, or if you would like to unsubscribe, please contact us at IIBANewsletter@theiiba.org.

The opinions expressed here are those of the authors and do not necessarily reflect the position of IIBA.

Please note: Paid advertising does not imply IIBA endorsement.

IIBA®, the IIBA® logo, *BABOK®* and *Business Analysis Body of Knowledge®* are registered trademarks owned by International Institute of Business Analysis.

CBAP® is a registered certification mark owned by International Institute of Business Analysis.

Certified Business Analysis Professional, EEP and the EEP logo, Certification of Competency in Business Analysis, CCBA and the CCBA logo are trademarks owned by International Institute of Business Analysis.

© International Institute of Business Analysis 2010. This newsletter is the copyrighted property of International Institute of Business Analysis. All rights reserved.