Thinking like a scientist means making a plan, thinking about the "what if's," solving problems, adapting to new situations and adjusting to changes. With this in mind, each honors student is to complete one of three projects. Each project consists of an experiment that can be completed within 60 minutes, and a construction component. Students are encouraged to work with a partner to make a team of two. There are three projects offered during the year. They count as a test grade.

Construction requirements for the paper roller coaster.

- Paper templates will be supplied.
- Online videos showing how to make the various pieces will be supplied.
- Other materials you must supply
  - Magazine
  - 12" ruler
  - Scissors
  - 1 marble
  - Ball point pen (a ball point works best.)
  - 1 roll of transparent tape (Scotch™ tape)
  - 1 piece of foam core 12" by no more than 30"

The coaster <u>must</u> be built on a base. Foam core board is the easiest material to use. It is available at Walmart, Kmart, Target, CVS and Michaels -to name a few stores. The base can be as long as 30 inches or as short as 21 inches. The base must be 12 inches wide -no less, no more. These dimensions have been chosen to make construction easier and to ensure that you don't bite off more than you can handle.

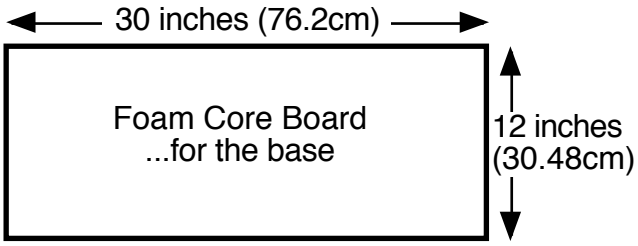

The following conditions must be met for complete credit

- ❏ It needs to work without <u>helping</u> the marble along and by starting the marble from rest.
- ❏ At least 2 loops
- ❏ At least 1 funnel.
- ❏ At least one track design piece that is not one of the 7 templates. But it can be made from them or pieces of them and you can add your own pieces from any material.
- ❏ The smallest dimension on the base is to 12"
- ❏ Sturdy construction
  - Diagonal pieces on columns on the base.
  - Horizontal beams every 18 inches of height and a horizontal ring of beams at the top.
- ❏ The largest dimension on the base is between 21 and 30"
- ❏ Maximum height is 30 inches or less.
- ❏ Your coaster must have a name.
- ❏ Remove the coaster from the room by or before the removal date.

EXTRA CREDIT for all participants.

You are also competing for extra credit points to be added to the score. This will make it possible to receive more than 100 % for the project. This is done by winning one or more of the following competitions. Each teacher will make an award to someone in his or her own class.

Best scenery

Lots of quality scenery covering the entire coaster and platform. Spending money on fancy scenery will not automatically make you a winner. Simple but clever or well done, campy, designs show more creativity –especially when they support the name and theme of your coaster.

Best Theme

What's the name of your roller coaster? Does your scenery support this theme? Does the design support your theme? Is there a coolness or cleverness factor to your name?

Most creative design element

Looking for something different. You may use items not made from paper for this.

Most complex design.

Wow. Were looking at the loops, twists ,dips, turns, etc.

EXTRA CREDIT for students who are not required to do the project as one of his or her required projects.

Check with your teacher for the extra credit's value. If you are doing this purely for extra credit, then you do not need to do the lab component. You only need to build the coaster according to the same guidelines as everyone else -including turning it in and remove it on time.

Please see the website http://www.mrwaynesclass.com/project for build tips and links to some "how to" movies.

Working with a partner can cut your build time by *more than 50%* IF YOU FOLLOW THESE GUIDELINES AND GET ORGANIZED.

_____ **Agree on the coaster's design.** Sketch it out on one of the following sheets. It does not need to be fancy. These sheets provide you with a way of communicating with your partner what could be done. Drawing with a pencil will make it easier to make design changes. There is a 3D drawing sheet and a piece of graph paper. Use one or both of these. Use he graph paper to draw an overhead view or a side view. Label each piece on the pictures. This will aide in getting organized later.

Having trouble envisioning the track's design? Cut the base to the maximum size 30" x 12". Make 6 tall columns and begin to place them around the base and discuss what will happen on your roller coaster. Look to www.joyrides.com to get some possible ideas.

_____ **Decide how many of each piece you will need to construct.** You need to have drawn the plan to get a good guess as to how many of each piece and which pieces you will need, Use the duty sheet that is with this packet to list what you need and who is to make. You could make the pieces separately and then get together later to construct the coaster.

_____ **Decide on who is making which pieces**. Make the pieces of the track. Make a list with names by each item that person is making. I have provided this list with this file/collection of handouts.

_____ **Build the structure first**. Begin to add the supports to the base. Add the diagonal pieces on the base. Then add the beams.

_____ **Add the track and other pieces.** You will also need "shelves." To set the track on. View the movie about tape tricks. This will help you tape some odd pieces to structure.

Construction Requirements

Below is the maximum size for the supports. Don't forget to draw in (include) center supports and cross supports to hold up the track.

Draw the track as a line. Use a pencil. (Each track piece is 25 cm (10 in.) long.) Your supports do not need to take up the whole base. You could make it more narrow.

These are the maximum dimensions. You will also need at least one more support column in the middle –if you make your coaster this long. Beams running horizontally across the 12 in distance will give a rigid structure to build on.

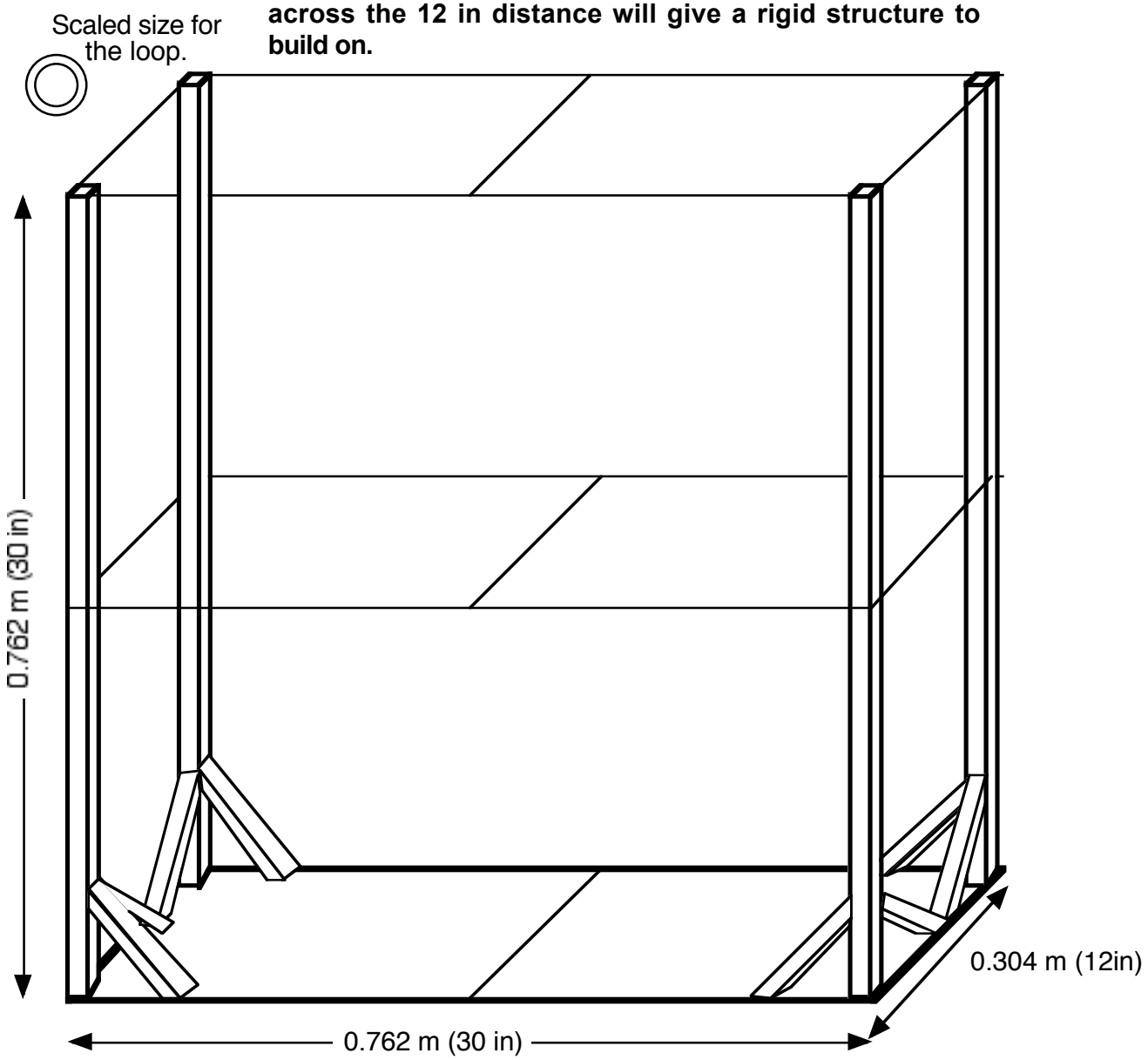

Plan of action and assigned responsibilities

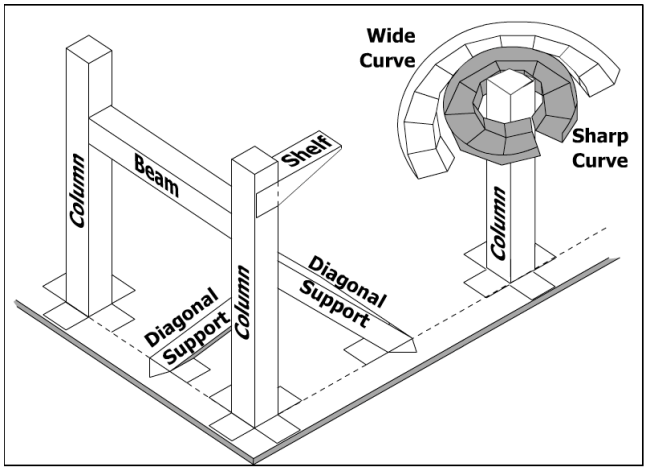

Part description	Estimated number of…	Name of the person making this part	Put a check here when all are complete
Loops			
Vertical columns			
Diagonal supports			
Track pieces			
Shelves			
Sharp curves			
Wide curves			
Funnel			
Beams			
Merge piece			
Coaster's name's sign			
Other			
Other			
Other			
Other			

Construction Requirements

Construction Requirements